Released under the Creative Commons Attribution Share-Alike 3.0 License
http://creativecommons.org/licenses/by-sa/3.0
Design by: M. Hord

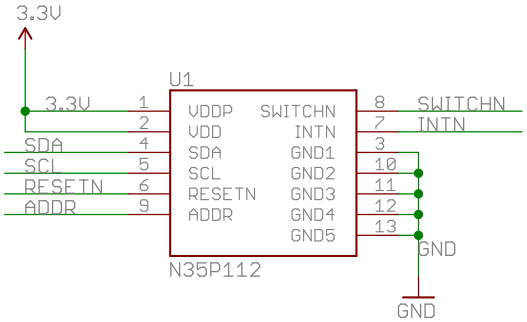

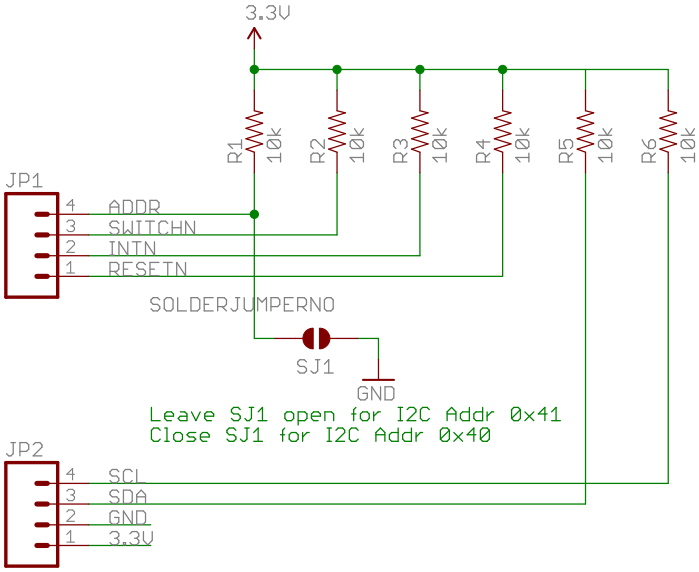

VER	DESCRIPTION	DATE	ENG
v11	ADD R6. RELEASE.	3411	MAH

open hardware

SFE

TITLE: N35P112 Breakout-v11

Document Number:

REV: v11

Date: 2/9/2012 1:05:23 PM

Sheet: 1/1