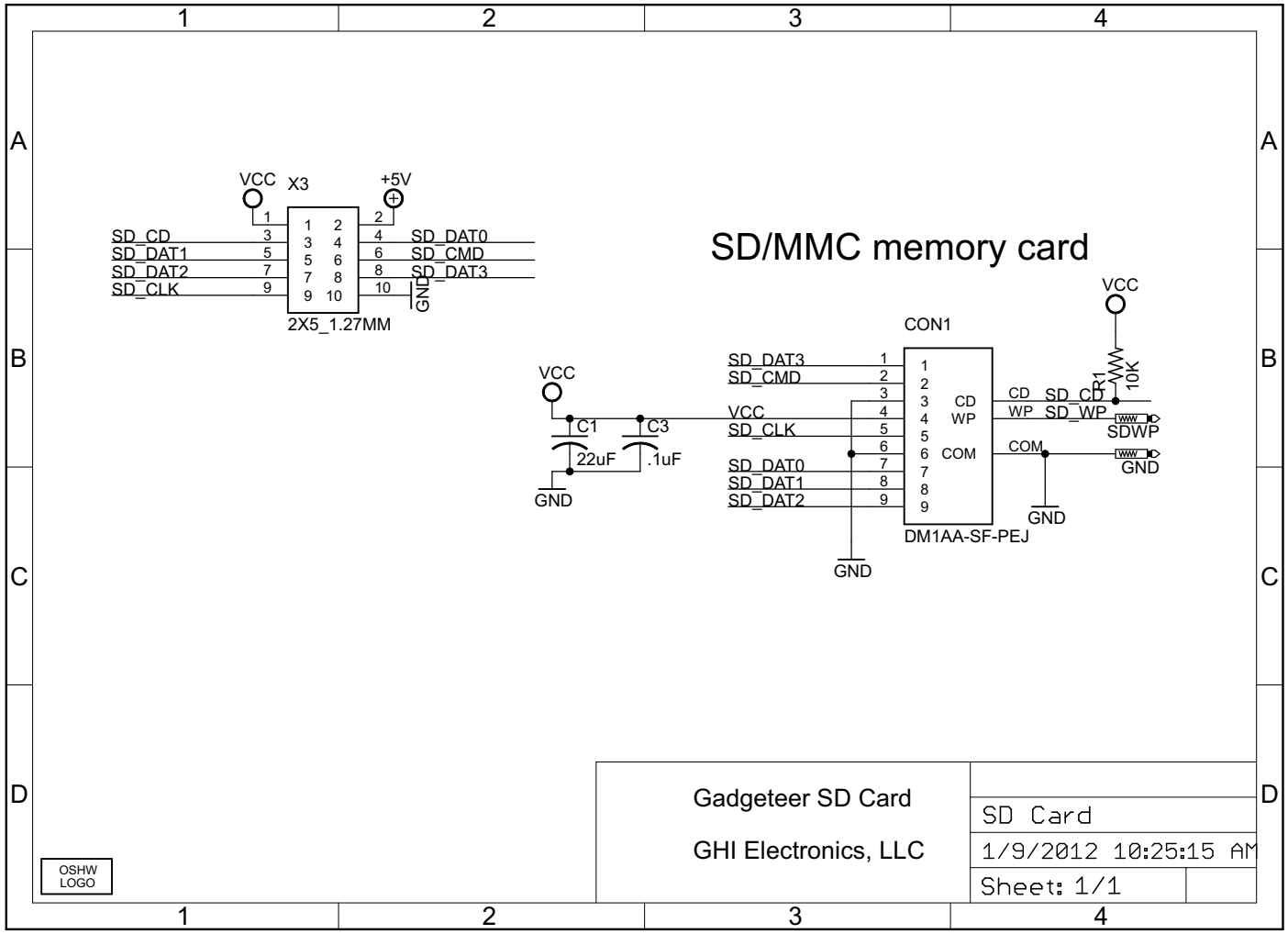
SD/MMC memory card
VCC
X3
+5V
SD_CD
SD_DAT1
SD_DAT2
SD_CLK
SD_DAT0
SD_CMD
SD_DAT3
GND
2X5_1.27MM
CON1
VCC
C1
22uF
C3
.1uF
GND
SD_DAT3
SD_CMD
VCC
SD_CLK
SD_DAT0
SD_DAT1
SD_DAT2
CD
WP
COM
DM1AA-SF-PEJ
R1
10K
SD_CD
SD_WP
SDWP
GND
OSHW LOGO
Gadgeteer SD Card
GHI Electronics, LLC
SD Card
1/9/2012 10:25:15 AM
Sheet: 1/1