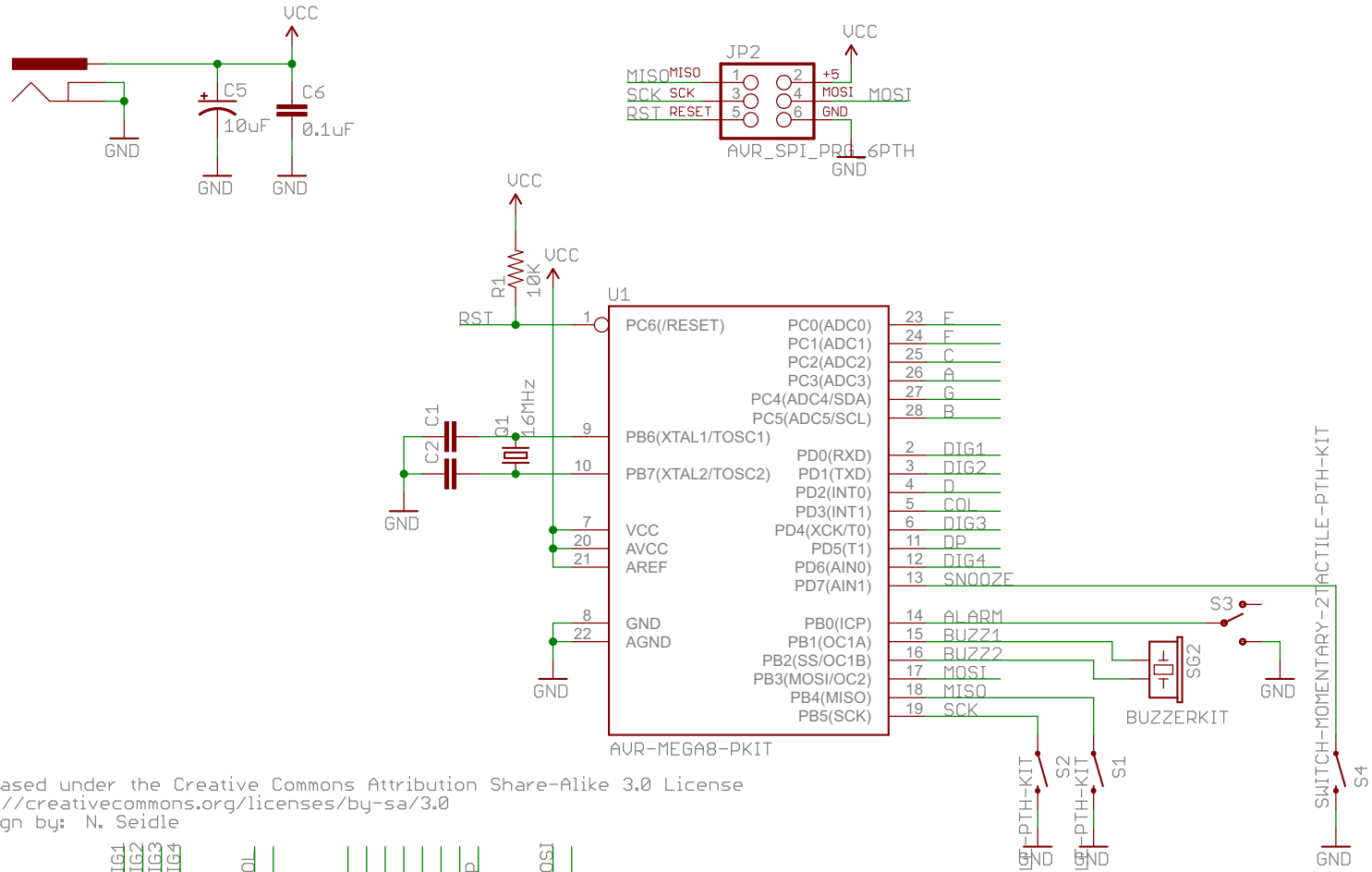

Released under the Creative Commons Attribution Share-Alike 3.0 License
http://creativecommons.org/licenses/by-sa/3.0
Design by: N. Seidle

TITLE: Clock-v16	SFE	SFE
Document Number:	REV:	
Date: not saved!	Sheet: 1/1	