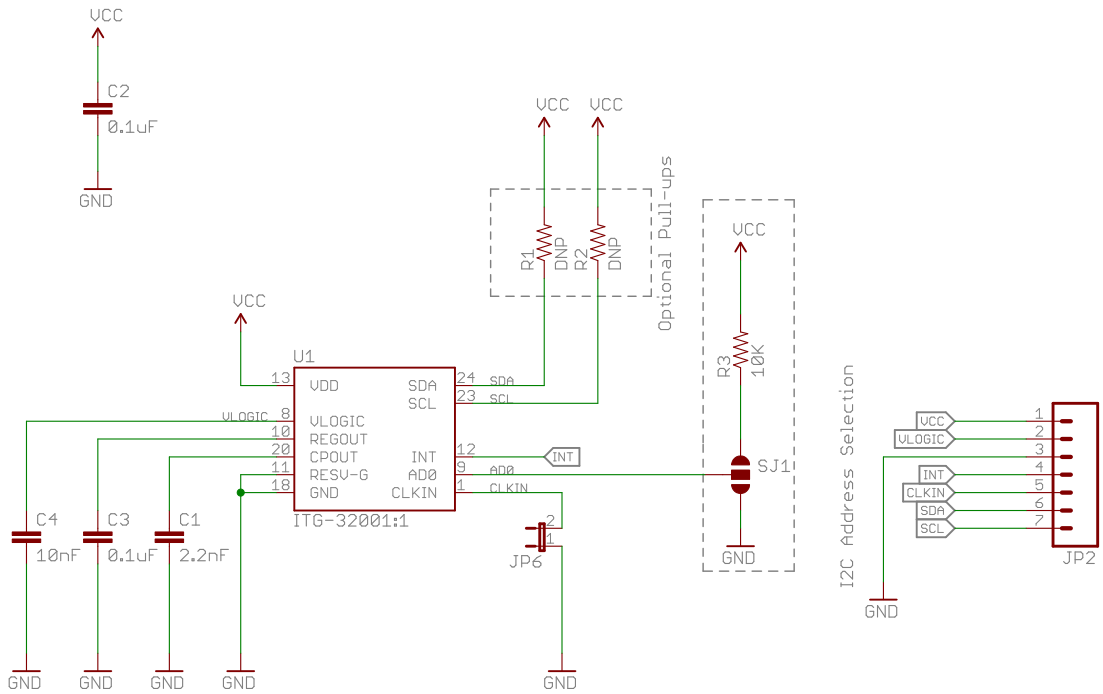

open hardware

SFE

Released under the Creative Commons
Attribution Share-Alike 3.0 License
http://creativecommons.org/licenses/by-sa/3.0

TITLE: Triple_axis_digital_-_output_gyro_ITG-3200_Breakout

Design by:	Revision by:	REV:
Jim Lindblom	EO	V12
Date: 9/11/2013 12:40:42 PM	Sheet: 1/1	