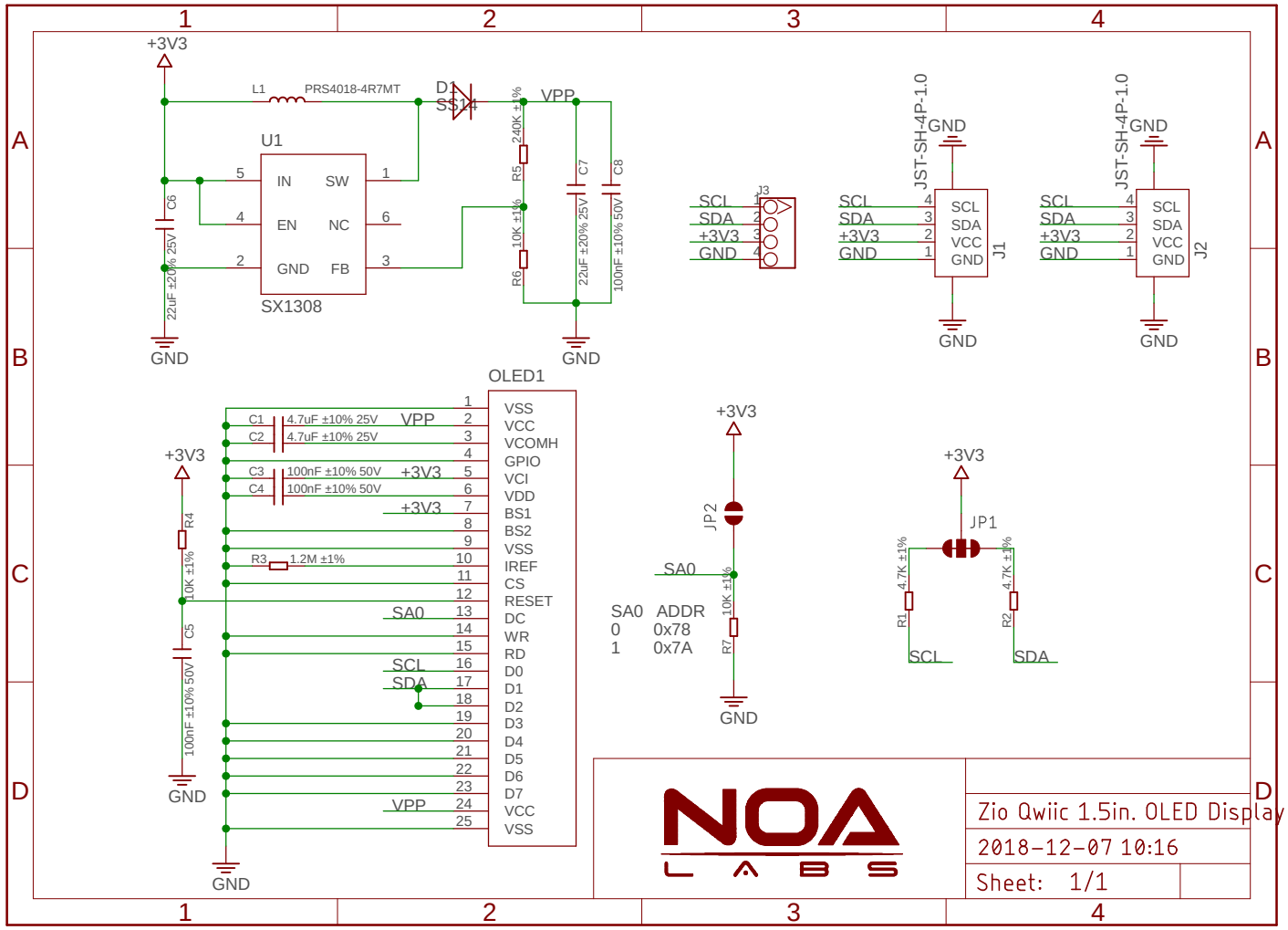
+3V3
L1
PRS4018-4R7MT
D1
SS14
VPP
U1
IN
SW
EN
NC
GND
FB
SX1308
C6
22uF ±20% 25V
R5
240K ±1%
R6
10K ±1%
C7
22uF ±20% 25V
C8
100nF ±10% 50V
GND
J3
SCL
SDA
+3V3
GND
JST-SH-4P-1.0
SCL
SDA
VCC
GND
J1
J2
OLED1
C1
4.7uF ±10% 25V
C2
4.7uF ±10% 25V
C3
100nF ±10% 50V
C4
100nF ±10% 50V
R3
1.2M ±1%
R4
10K ±1%
C5
100nF ±10% 50V
VSS
VCC
VCOMH
GPIO
VCI
VDD
BS1
BS2
VSS
IREF
CS
RESET
DC
WR
RD
D0
D1
D2
D3
D4
D5
D6
D7
VCC
VSS
JP2
SA0
R7
10K ±1%
SA0 ADDR
0 0x78
1 0x7A
JP1
R1
4.7K ±1%
R2
4.7K ±1%
SCL
SDA
NOA
LABS
Zio Qwiic 1.5in. OLED Display
2018-12-07 10:16
Sheet: 1/1