Example Project: Light Box

Collect Materials

The materials list for this project is a little more specific in terms of requirements. You will be using a razor blade and steel ruler. Please take your time, and have patience while using these tools. Most of the time injuries come from rushing. Be safe, and be creative.

shallow box	**craft knife**	**scrap cardboard**
cardstock	**steel ruler**	**pencil**

Multiple LEDs, Multiple Sensors

Note: *Your Galileo should be unplugged at this time.*

In the previous project you built a night light with a single sensor and a single LED. In this project you are going to tackle multiple inputs and outputs in the form of a light box project that reacts to different sensors of your choice. This project is designed for you to explore how different materials react to light and to become familiar with sensors in a playful way.

Adding Multiple Outputs

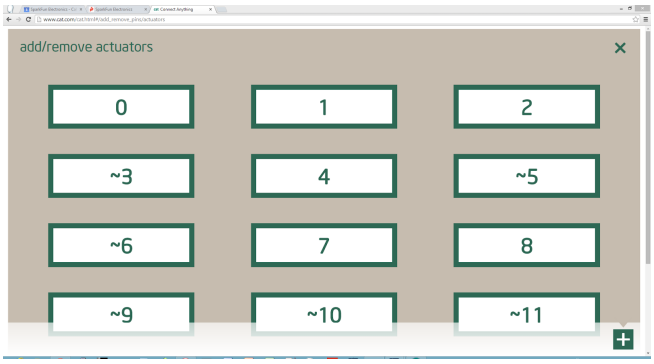

You used a single input and single output. It is now time for you to add multiples of both. This is actually really simple! You end up doing the same thing you did for a single LED just duplicating the procedure four times over. Grab all four of the LEDs in your kit and eight jumper wires. It will be easier on you if you try to use different colored wires for each LED so you can keep them all straight. There should be enough black wires to use for ground wires. If not, you can use green or some other color as well. Hook up LEDs on pins 13, 12, 11 and 10. Once you have them hooked up go ahead and boot up your Galileo. **Remember: Long leg to SIG and short leg to GND**

In Configure Mode add your four outputs by clicking on the green plus sign, and add the pins you have wired (13, 12, 11 and 10). Once they are added go ahead and enter Controller Mode. You will see that you have two sliders and two buttons. You know how the buttons work, but click on them to make sure that your wiring is correct and everything works. Go ahead and use one, and see what happens when you move the slider. It allows you to control the brightness of that LED. Why is that?

Analog vs. Digital

In the night light project you turned something on and off, and that is digital. Digital means that there are two states of something; on or off, 0 or 1, true or false. On the other hand analog means that things can be on or off and a range of values in between. Think of the differences between a standard light switch and a dimmer switch in your house, and that is digital vs. analog. The Galileo takes an analog value as an input. That is what the A stands for on the input pins. The outputs with a tilde (~) is an analog output which you can use to create a dimming effect with an LED.

Adding Multiple Sensors

You can do the same thing in terms of adding multiple inputs as you did with outputs. Click on the yellow plus sign. Add two sensors (A0 and A1). Go back to Configure Mode and check out what you have to work with. You should see something similar to the image below.

You should notice that each sensor bar is almost full. When you do not have a sensor plugged in, the values are what is called “floating”, pretty much random. You are going to add two sensors, and the first sensor is going to be the light sensor that you used for the night light project, connected to A0. You are hooking things up with the Galileo powered at this point. Please be careful to hook things up correctly, otherwise you may short out the board or damage the sensor. The second sensor that you are going to add is the touch sensor.

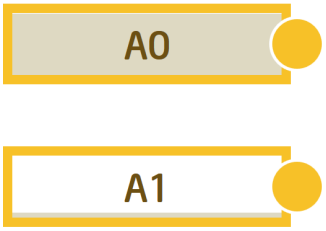

The touch sensor is based on the principle of capacity. Capacity is the idea that most things hold a charge, our bodies included. The sensor can detect that charge when you get close to it or touch it. The touch sensor has four pins on it, you will only use three of them. You can probably guess the three that you will be using. Yes, that’s correct...GND, VDD and OUT. GND should be hooked up to Ground with a black wire. OUT should be connected to SIG on the A1 row, and VDD should be connected to PWR. Once you connect the sensor go ahead and touch the circle pad and watch the sensor readout in configure mode [images]. It works! You will also notice that an LED on the sensor itself will light up.

Connections and Controls

Now all that is left is connecting everything. This is for you to choose which sensor is connected to which LED. You can do a number of creative things with the connections you make in CAT. The obvious connection is to simply connect an input to an output. You can connect one input to multiple outputs and have one sensor control multiple outputs. You can connect multiple sensors to one output which then outputs the sum of the inputs. Last but not least, you can also use controller mode to manually control an output. The setup is entirely up to you.

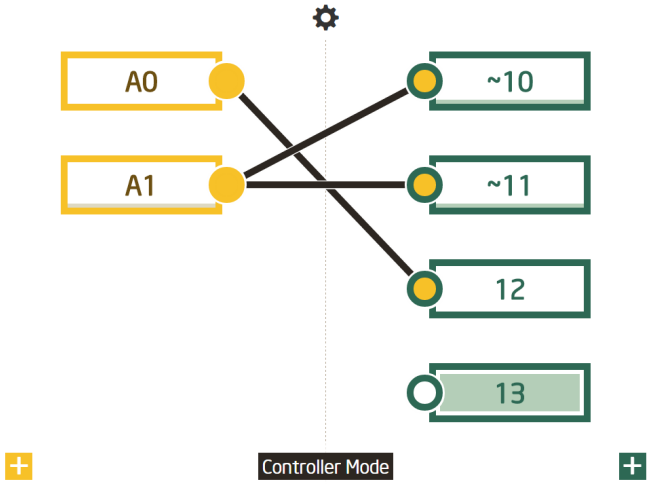

Creating the lightbox inserts

Now that you have your system working, and all of your inputs connect to your outputs, you can focus on the construction portion of this project. What you will be creating is a light box. A light box is a series of layers of opaque materials with shapes cut out of them which let light through in a direct or reflected manner.

The shapes and layers can be as abstract as you want or become an image of something...maybe a city skyline. In between the layers of cardstock you will insert the four LEDs. They will light the layers in different colors and be interactive through the use of the inputs you connect and Controller Mode in CAT.

Once you receive your card stock cut it to match the dimensions of the inside of your box. Sketch out the shapes that you want to have removed where light will shine through and faces that will or won't reflect color. Once you have something worked out you can start to carefully use a craft knife or a pair of scissors to cut out shapes. PLEASE BE CAREFUL WITH RAZOR BLADES, AND WORK SLOWLY!
[image of sketch and cut]

Some tips for a great light box…

- Smaller openings are more dramatic and have higher contrast
- Larger openings give subtle change and broad strokes of light
- Constantly work with the layers, and check what overlaps as you are cutting holes
- Think about what is backlit and the idea of figure and ground

Final Assembly

To accomplish final assembly of this project you will need to take the box you have been given and glue a blank sheet of paper or cardstock in the bottom of the box. Once that is in place you can use pieces of scrap cardboard. In my case I used some plastic drink straws

that I cut into ½” lengths to build the legs. I glued them to the bottom of the next layer and finally glued that into the box.

Repeat this process for all of your layers. Be sure to place the spacers where layers overlap and are not left hanging in space. Once the glue sets use a pencil to poke holes in the box where you would like the LEDs inserted, and press fit each LED through the hole. Take great care not to run into one of your layers with the pencil or LED.

Once you have your LEDs placed find interesting places to mount your sensors, and then you are good to go. A great thing to do is to turn off all of the lights in the classroom, and do a gallery walk to check out everyone’s light boxes. You will be amazed by what you will see!