Connect AnyThing

WIFI:

Inputs

Sound Sensor

GND--> GND
AUDIO--> A0
5V--> 5V

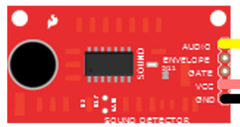

A sound sensor detects the intensity (how loud) the noise of the room is. There are 3 different settings, try each one out

How to use an Input

Add and input by clicking the yellow plus sign and select the pin (A0) you will use.

When the sensor is wired to the diagram you should start to see the bar graph move up and down. The sound detector has 3 different outputs, be sure to test each one: Evelope, Audio and Gate.

You may get very little response depending on the room. You can scale your sensor value using the triangles for your minimum and maximum values. The dotted line is the point that it will turn on an output connected to the input.

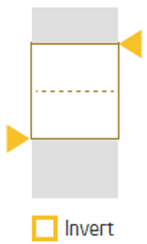

Tips and Tricks

1. Play around with the scale of your input
2. see what happens when you invert your input
3. If it doesnt work check the connections in CAT and on your Galileo.
4. Try a different sensor, or pin on the sensor.

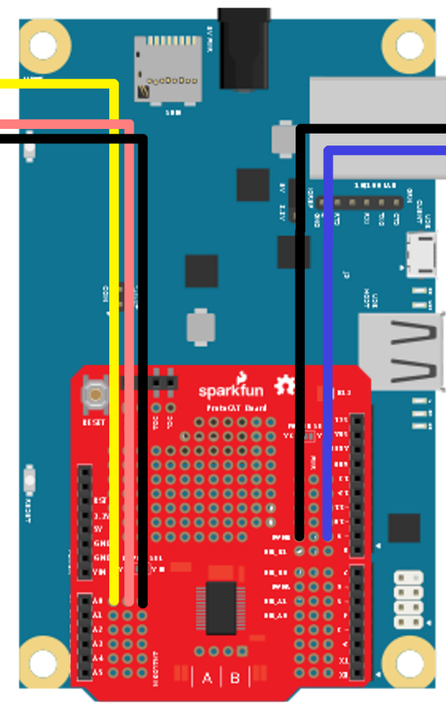

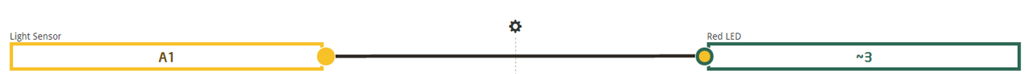

1. Connect to the wireless network above
2. go to cat.com
3. Add an input and name it
4. Add an output and name it
5. Connect your input to your output
6. Build a stage and light it using your system!

Outputs

LEDS

Long pin--> Pin 13
short pin--> GND

An LED is a special type of light bulb. LEDs only work in one direction; if yours doesnt work flip it around

Project: Light Box

Using CAT, your sound sensor and your choice of colored LEDs design and build a light box scene in a shoebox! You have a number of different materials at your disposal; from cardboard and tape to hot glue and plastics whatever is on the materials table is free game to use!

The main idea behind this project is to design a scene that uses figure ground relationships and silhouettes in conjuncture with you LEDs to creats something cool.

Tips and Tricks:

1. Depending on your output choice your LEDs will either be only ON/OFF or will dim with the sound level.

2. Play with your background/ foreground color, White reflects while black absorbs light.

3. Play with different materials and how light passes through them, or not.

4. try using music from your iPod to control lighting using the sound sensor

CC BY NC