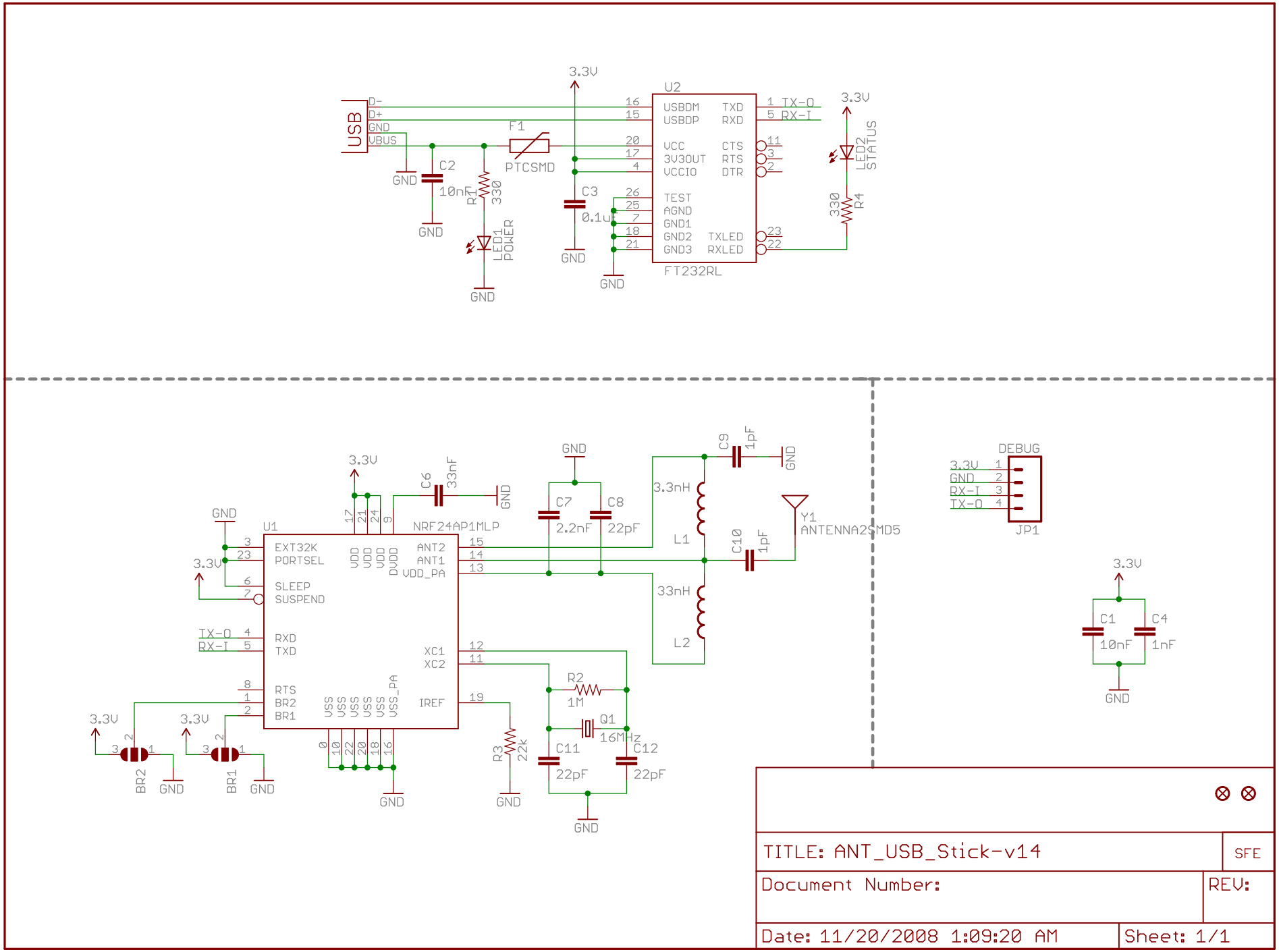
USB
D-
D+
GND
VBUS
F1
PTCSMD
C2
10nF
R1
330
LED1
POWER
3.3V
C3
0.1uF
U2
USBDM
USBDP
VCC
3V3OUT
VCCIO
TEST
AGND
GND1
GND2
GND3
TXD
RXD
CTS
RTS
DTR
TXLED
RXLED
FT232RL
TX-O
RX-I
LED2
STATUS
R4
330
U1
NRF24AP1MLP
EXT32K
PORTSEL
SLEEP
SUSPEND
RXD
TXD
RTS
BR2
BR1
VDD
DVDD
ANT2
ANT1
VDD_PA
XC1
XC2
IREF
VSS
VSS_PA
C6
33nF
C7
2.2nF
C8
22pF
C9
1pF
C10
1pF
3.3nH
L1
33nH
L2
Y1
ANTENNA2SMD5
R2
1M
Q1
16MHz
C11
22pF
C12
22pF
R3
22k
BR2
BR1
DEBUG
JP1
C1
10nF
C4
1nF
TITLE: ANT_USB_Stick-v14
SFE
Document Number:
REV:
Date: 11/20/2008 1:09:20 AM
Sheet: 1/1