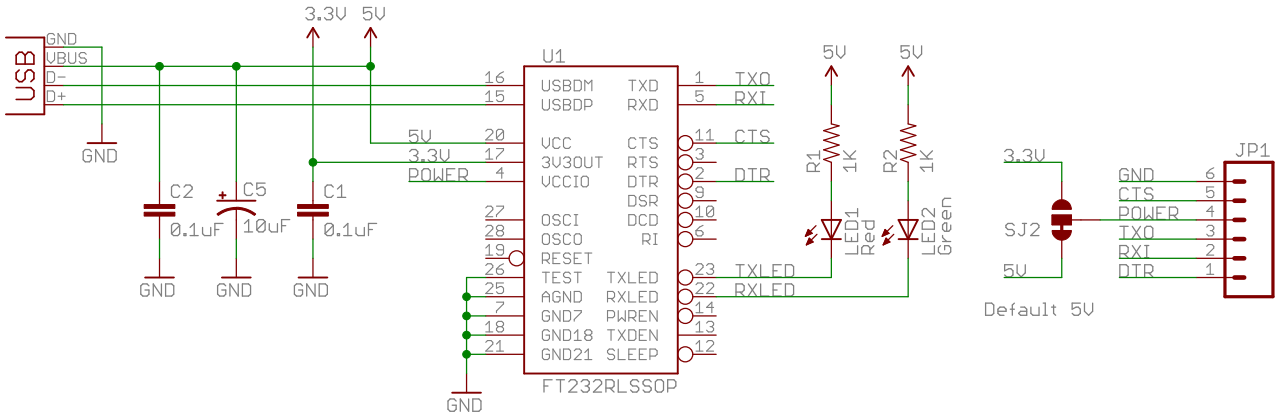

TITLE: FTDI Basic-v13-5V

SFE

Document Number:

REV:

Date: 2/13/2009 12:45:52 AM

Sheet: 1/1