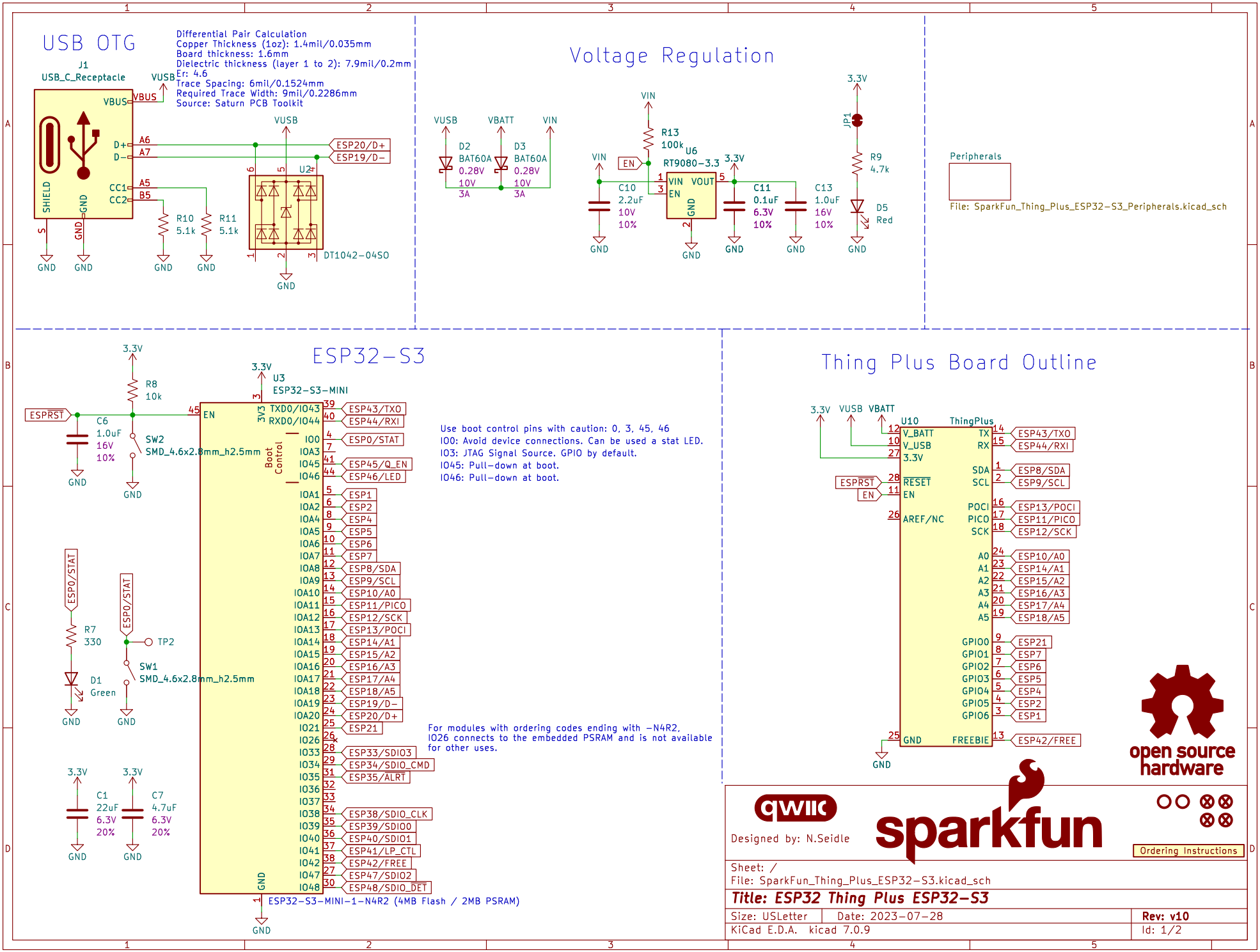
USB OTG
Differential Pair Calculation
Copper Thickness (1oz): 1.4mil/0.035mm
Board thickness: 1.6mm
Dielectric thickness (layer 1 to 2): 7.9mil/0.2mm
Er: 4.6
Trace Spacing: 6mil/0.1524mm
Required Trace Width: 9mil/0.2286mm
Source: Saturn PCB Toolkit
J1
USB_C_Receptacle
VUSB
VBUS
D+
D−
A6
A7
CC1
CC2
A5
B5
SHIELD
GND
R10
5.1k
R11
5.1k
U2
DT1042−04SO
ESP20/D+
ESP19/D−
Voltage Regulation
VUSB
VBATT
VIN
D2
BAT60A
0.28V
10V
3A
D3
BAT60A
0.28V
10V
3A
R13
100k
U6
RT9080−3.3
EN
VOUT
C10
2.2uF
10V
10%
C11
0.1uF
6.3V
10%
C13
1.0uF
16V
10%
3.3V
JP1
R9
4.7k
D5
Red
Peripherals
File: SparkFun_Thing_Plus_ESP32−S3_Peripherals.kicad_sch
ESP32−S3
U3
ESP32−S3−MINI
ESPRST
R8
10k
C6
1.0uF
16V
10%
SW2
SMD_4.6x2.8mm_h2.5mm
EN
3V3
TXD0/IO43
RXD0/IO44
IO0
IO45
IO46
Boot Control
ESP43/TXO
ESP44/RXI
ESP0/STAT
ESP45/Q_EN
ESP46/LED
Use boot control pins with caution: 0, 3, 45, 46
IO0: Avoid device connections. Can be used a stat LED.
IO3: JTAG Signal Source. GPIO by default.
IO45: Pull−down at boot.
IO46: Pull−down at boot.
ESP1
ESP2
ESP4
ESP5
ESP6
ESP7
ESP8/SDA
ESP9/SCL
ESP10/A0
ESP11/PICO
ESP12/SCK
ESP13/POCI
ESP14/A1
ESP15/A2
ESP16/A3
ESP17/A4
ESP18/A5
ESP19/D−
ESP20/D+
ESP21
R7
330
D1
Green
TP2
SW1
SMD_4.6x2.8mm_h2.5mm
C1
22uF
6.3V
20%
C7
4.7uF
6.3V
20%
For modules with ordering codes ending with −N4R2,
IO26 connects to the embedded PSRAM and is not available
for other uses.
ESP33/SDIO3
ESP34/SDIO_CMD
ESP35/ALRT
ESP38/SDIO_CLK
ESP39/SDIO0
ESP40/SDIO1
ESP41/LP_CTL
ESP42/FREE
ESP47/SDIO2
ESP48/SDIO_DET
ESP32−S3−MINI−1−N4R2 (4MB Flash / 2MB PSRAM)
Thing Plus Board Outline
U10
ThingPlus
V_BATT
V_USB
3.3V
RESET
EN
AREF/NC
GND
TX
RX
SDA
SCL
POCI
PICO
SCK
A0
A1
A2
A3
A4
A5
GPIO0
GPIO1
GPIO2
GPIO3
GPIO4
GPIO5
GPIO6
FREEBIE
ESP43/TXO
ESP44/RXI
ESP8/SDA
ESP9/SCL
ESP13/POCI
ESP11/PICO
ESP12/SCK
ESP10/A0
ESP14/A1
ESP15/A2
ESP16/A3
ESP17/A4
ESP18/A5
ESP21
ESP7
ESP6
ESP5
ESP4
ESP2
ESP1
ESP42/FREE
open source hardware
qwiic
sparkfun
Designed by: N.Seidle
Ordering Instructions
Sheet: /
File: SparkFun_Thing_Plus_ESP32−S3.kicad_sch
Title: ESP32 Thing Plus ESP32−S3
Size: USLetter
Date: 2023−07−28
Rev: v10
KiCad E.D.A. kicad 7.0.9
Id: 1/2

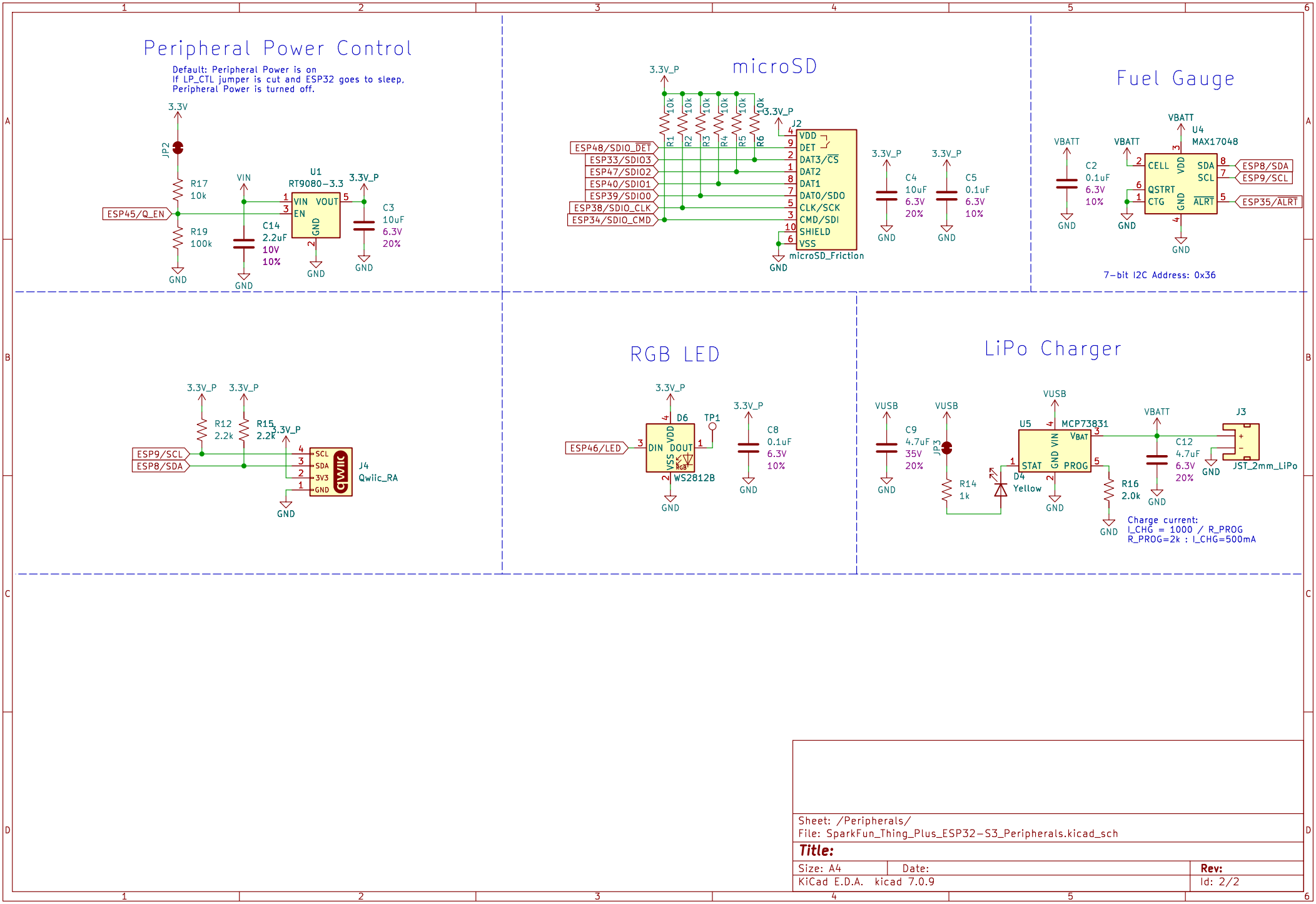
Peripheral Power Control
Default: Peripheral Power is on
If LP_CTL jumper is cut and ESP32 goes to sleep,
Peripheral Power is turned off.
3.3V
JP2
R17
10k
ESP45/Q_EN
R19
100k
GND
VIN
C14
2.2uF
10V
10%
U1
RT9080-3.3
VIN
EN
VOUT
GND
3.3V_P
C3
10uF
6.3V
20%
microSD
3.3V_P
R1
R2
R3
R4
R5
R6
10k
ESP48/SDIO_DET
ESP33/SDIO3
ESP47/SDIO2
ESP40/SDIO1
ESP39/SDIO0
ESP38/SDIO_CLK
ESP34/SDIO_CMD
J2
VDD
DET
DAT3/CS
DAT2
DAT1
DAT0/SDO
CLK/SCK
CMD/SDI
SHIELD
VSS
microSD_Friction
C4
10uF
6.3V
20%
C5
0.1uF
6.3V
10%
Fuel Gauge
VBATT
C2
0.1uF
6.3V
10%
U4
MAX17048
CELL
VDD
SDA
SCL
QSTRT
CTG
GND
ALRT
ESP8/SDA
ESP9/SCL
ESP35/ALRT
7-bit I2C Address: 0x36
R12
2.2k
R15
2.2k
ESP9/SCL
ESP8/SDA
SCL
SDA
3V3
GND
J4
Qwiic_RA
RGB LED
ESP46/LED
D6
TP1
DIN
DOUT
VDD
VSS
WS2812B
C8
0.1uF
6.3V
10%
LiPo Charger
VUSB
C9
4.7uF
35V
20%
JP3
R14
1k
D4
Yellow
U5
MCP73831
VBAT
STAT
PROG
GND VIN
R16
2.0k
C12
4.7uF
6.3V
20%
J3
JST_2mm_LiPo
Charge current:
I_CHG = 1000 / R_PROG
R_PROG=2k : I_CHG=500mA
Sheet: /Peripherals/
File: SparkFun_Thing_Plus_ESP32-S3_Peripherals.kicad_sch
Title:
Size: A4
Date:
Rev:
KiCad E.D.A. kicad 7.0.9
Id: 2/2