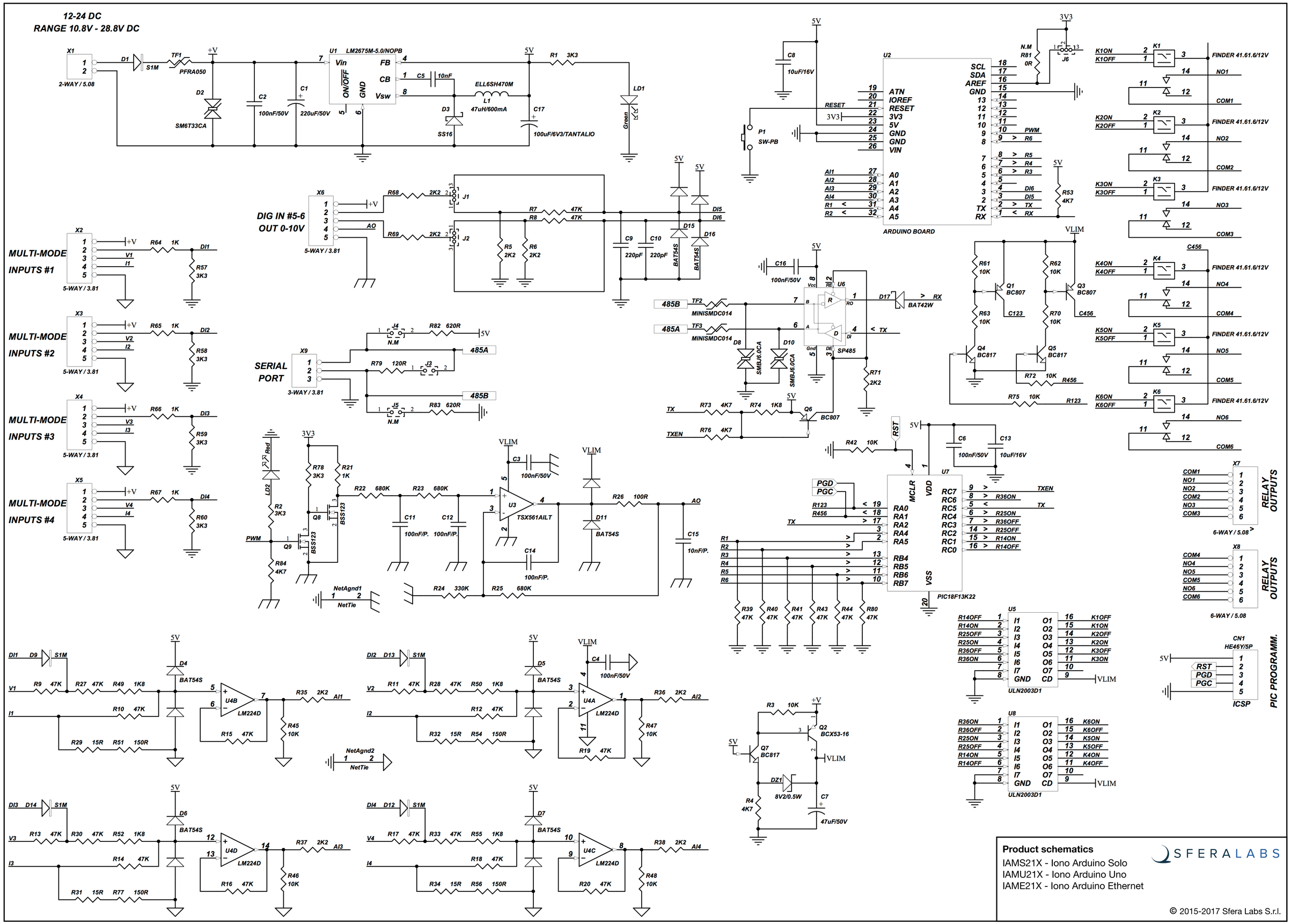
12-24 DC
RANGE 10.8V - 28.8V DC
U1 LM2675M-5.0/NOPB
ARDUINO BOARD
U2
U7
PIC18F13K22
U3
TSX561AILT
U4A
U4B
U4C
U4D
LM224D
U5
U8
ULN2003D1
U6
SP485
DIG IN #5-6
OUT 0-10V
MULTI-MODE
INPUTS #1
MULTI-MODE
INPUTS #2
MULTI-MODE
INPUTS #3
MULTI-MODE
INPUTS #4
SERIAL
PORT
FINDER 41.61.6/12V
RELAY
OUTPUTS
PIC PROGRAMM.
ICSP
NetAgnd1
NetAgnd2
NetTie
Product schematics
IAMS21X - Iono Arduino Solo
IAMU21X - Iono Arduino Uno
IAME21X - Iono Arduino Ethernet
SFERALABS
© 2015-2017 Sfera Labs S.r.l.