USB-C

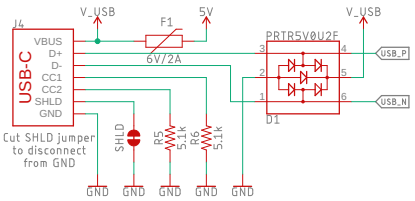

Differential Pair Calculation:

Total Copper Thickness: 1.4mil / 36um
Material: FR-4 STD Er:4.6
Conductor Width: 9.42mil / 0.24mm
Conductor Spacing: 7mil / 0.18mm
JLC-7628 Prepreg dielectric thickness: 0.180mm (7.1mil) 4-LAYER

Zdifferential: 90.0 Ohms

http://saturnpcb.com/pcb_toolkit/

3V3 Regulator

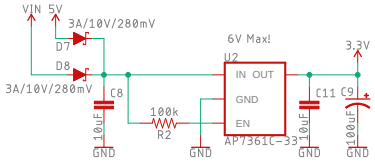

SIM Card

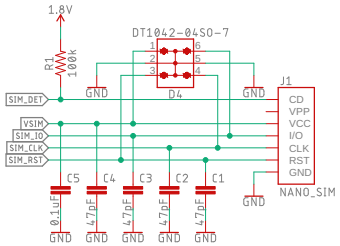

Antenna Connectors

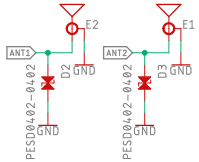

Coplanar Waveguide Calculation:

Total Copper Thickness: 1.4mil / 36um
Material: FR-4 STD Er:4.6
Conductor Width: 12.3mil / 0.31mm
Conductor Gap: 7mil / 0.18mm
JLC-7628 Prepreg dielectric thickness: 0.180mm (7.1mil) 4-LAYER

Z: 50.0 Ohms

http://saturnpcb.com/pcb_toolkit/

Buttons

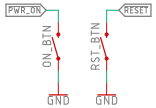

LEDs

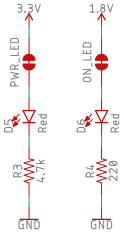

Cut PWR and ON jumpers to disconnect LEDs

Level Shifters

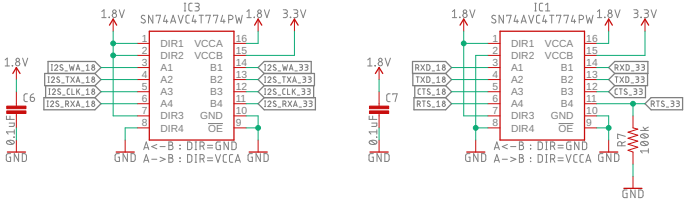

Headers

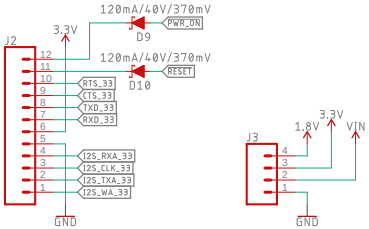

LARA-R6

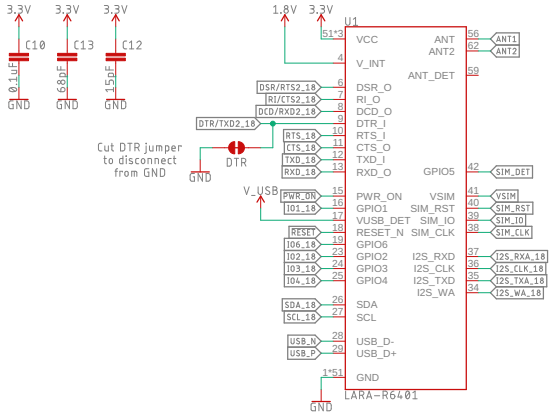

Test Points

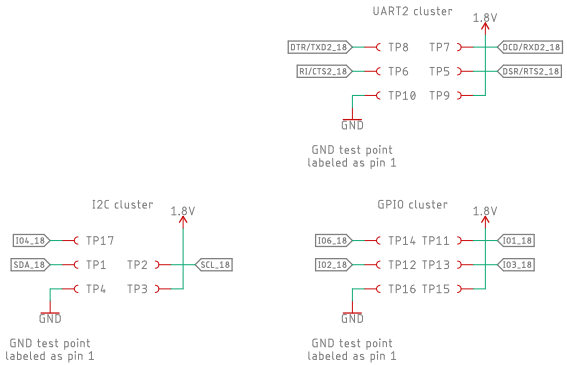

open hardware

sparkfun

Released under the Creative Commons Attribution Share-Alike 4.0 License
https://creativecommons.org/licenses/by-sa/4.0/

TITLE: SparkFun_LTE_Stick_LARA_R6	
Design by: Dryw Wade	REV: v11
Date: 11/29/2023 4:01 PM	Sheet: 1/1