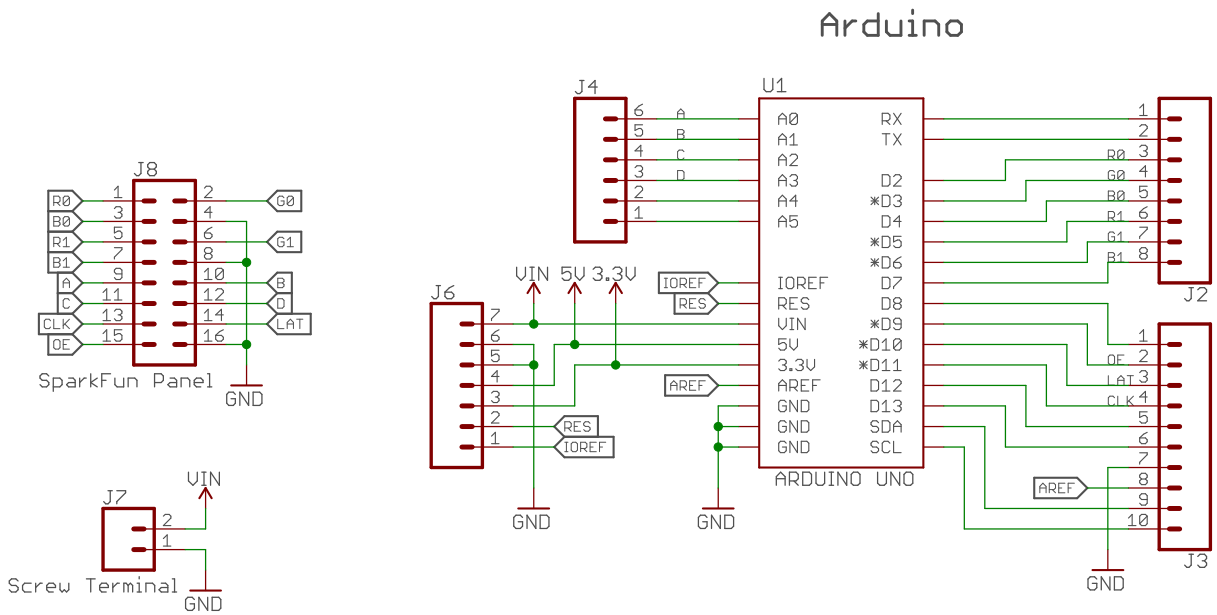

Released under the Creative Commons
Attribution Share-Alike 4.0 License
https://creativecommons.org/licenses/by-sa/4.0/

TITLE: RGB Panel Shield for Arduino

Design by: Seidle

REV: V10

Date: 4/30/2018 4:57 PM

Sheet: 1/1