Voltage Regulator and Battery Charger

V_USB - 6V MAX
V_BATT - Single Cell (4.2V MAX)

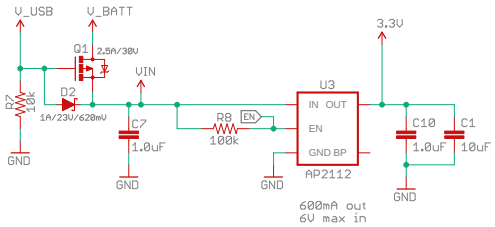

Lithium-Polymer Battery Charger (1-cell)

V_BATT should be a single-cell LiPo battery.

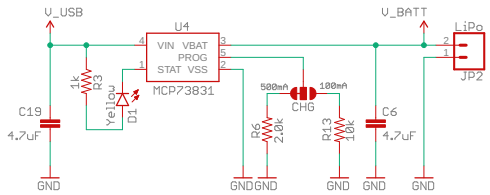

Charge current:
I_CHG = 1000 / R_PROG
R_PROG=2k : I_CHG=500mA (DEFAULT)
R_PROG=10k : I_CHG=100mA

CP2104/2N (USB-to-Serial Converter)

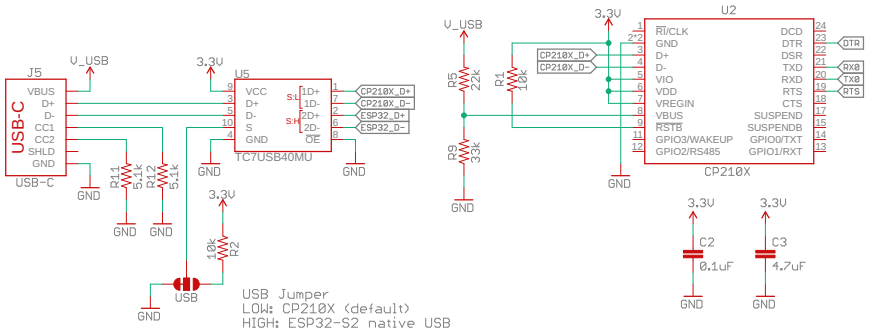

Espressif ESP32-S2

Module recommended VCC range: 3.0-3.6V

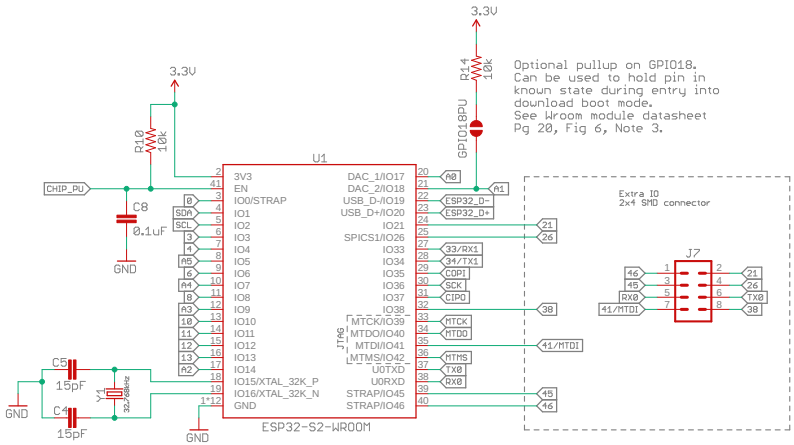

QWIIC Connector

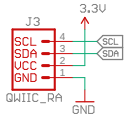

Auto-Reset

Boot Mode Configuration

Pin	Default	Boot	Download
GPIO0	1	1	0
GPIO45*	x	x	x
GPIO46	0	x	0

*GPIO45 sets SPI voltage, see DS pg 17.

If GPIO45 and GPIO46 are floating,
GPIO0 determines boot mode

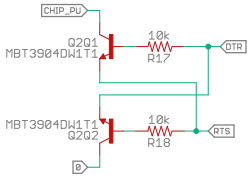

If DTR is LOW, toggling RTS from HIGH to LOW resets to run mode.
If RTS is HIGH, toggling DTR from LOW to HIGH resets to bootloader.

GPIO0 Button

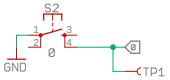

Headers

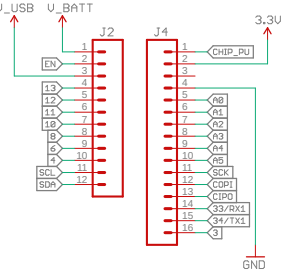

JTAG

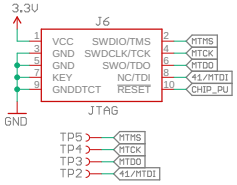

GPIO13 LED

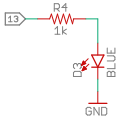

Reset Button

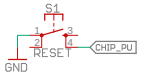

Original ESP32 Thing by Jim Lindblom

THIS IS A FOUR-LAYER BOARD!

Released under the Creative Commons
Attribution Share-Alike 4.0 License
https://creativecommons.org/licenses/by-sa/4.0/

TITLE: ESP32-S2_Thing_Plus

Design by: Pete Lewis
Based on designs by: M. Hord, A. Wende

REV: v10

Date: 4/7/2021 8:05 AM

Sheet: 1/1