ECG 6 click schematic v100

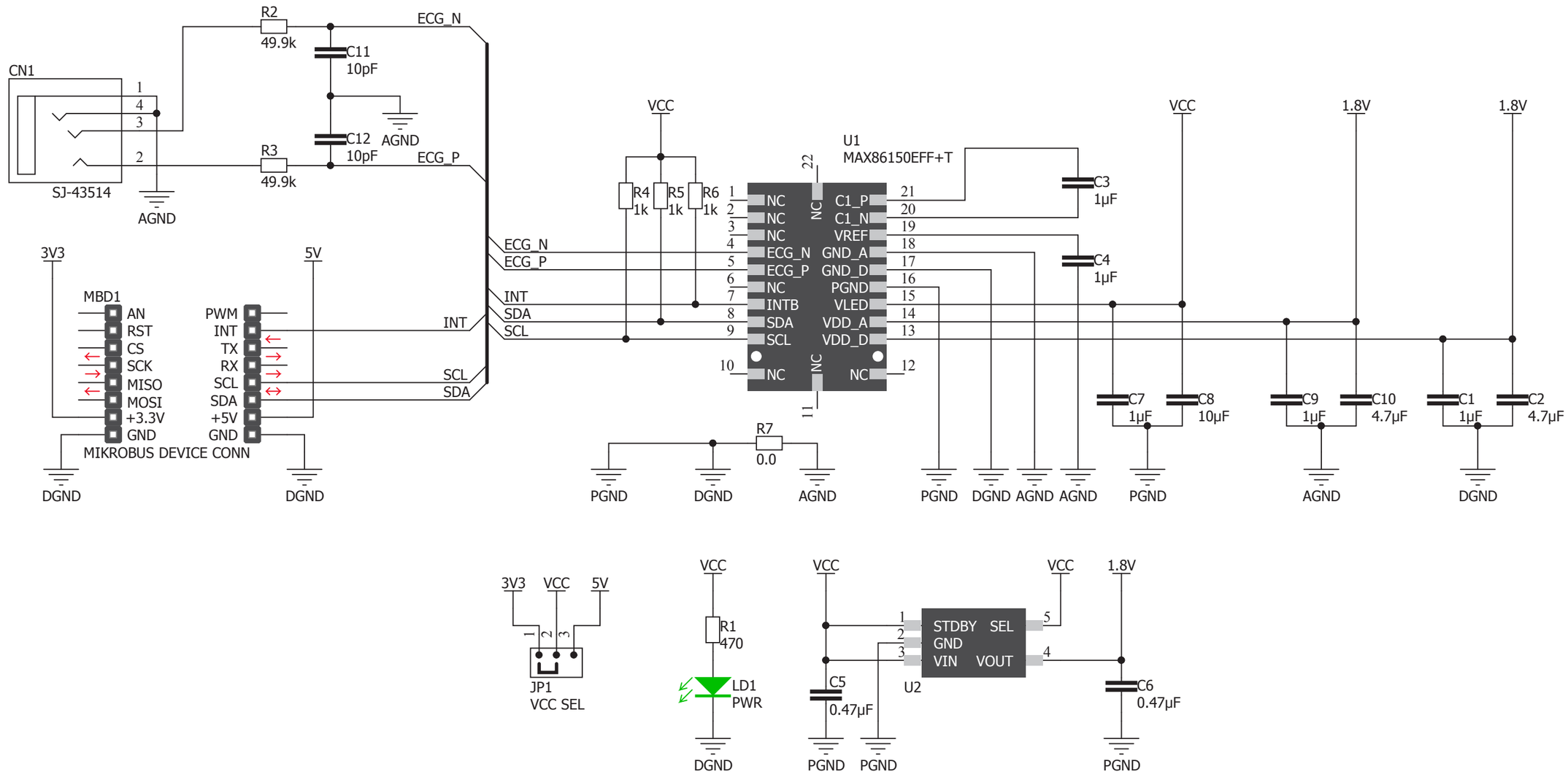

www.mikroe.com

Mikroelektronika assumes no responsibility or liability for any errors or inaccuracies that may appear in the present document.
Specification and information contained in the present schematic are subject to change at any time without notice. Copyright©2020 MikroElektronika. All rights reserved.