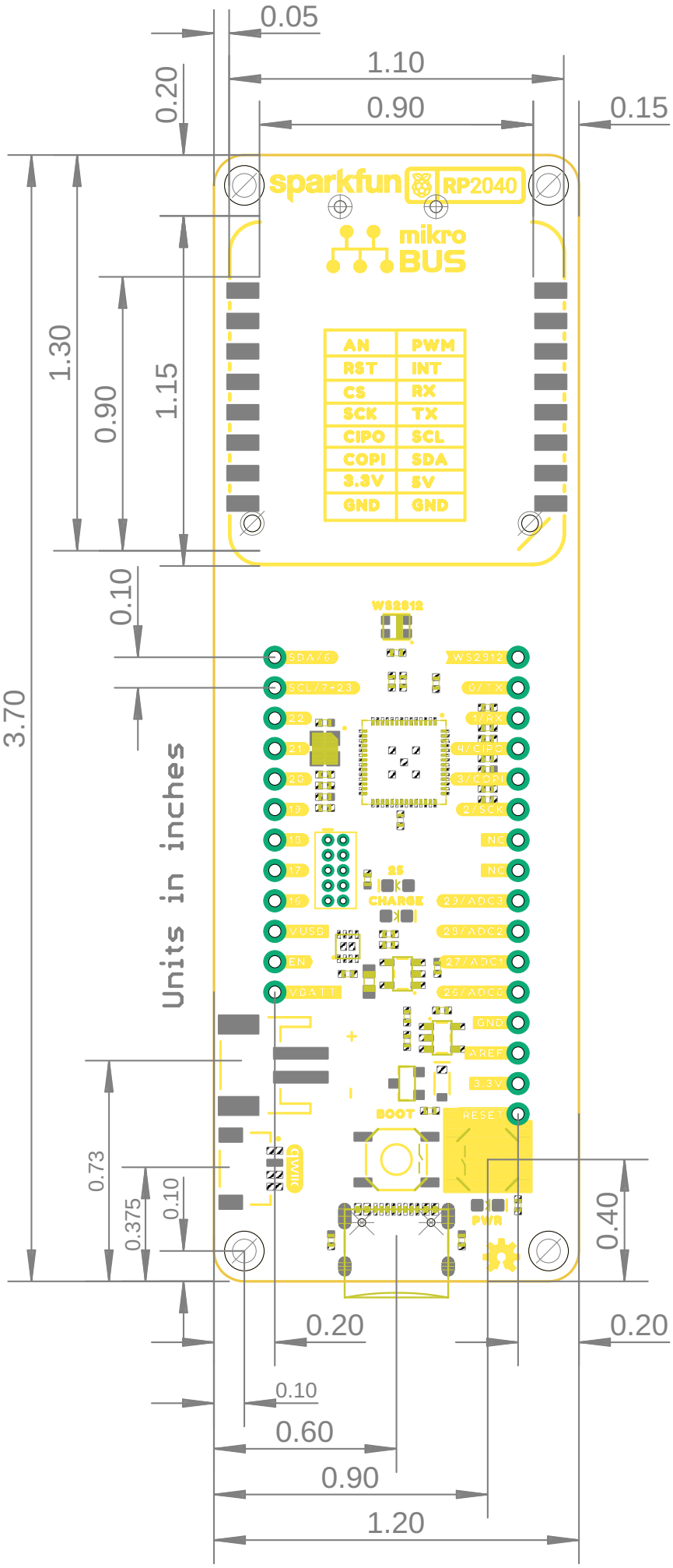
0.05
1.10
0.20
0.90
0.15
sparkfun
RP2040
mikro
BUS
AN
PWM
RST
INT
CS
RX
SCK
TX
CIPO
SCL
COPI
SDA
3.3V
5V
GND
GND
1.30
0.90
1.15
0.10
3.70
Units in inches
WS2812
SDA/6
SCL/7+23
22
21
20
19
18
17
16
VUSB
EN
VBATT
WS2812
0/TX
1/RX
4/CIPO
3/COPI
2/SCK
NC
NC
29/ADC3
28/ADC2
27/ADC1
26/ADC0
GND
AREF
3.3V
RESET
25
CHARGE
BOOT
QWIIC
PWR
0.73
0.375
0.10
0.40
0.20
0.20
0.10
0.60
0.90
1.20