LSM6DSO

Datasheet

6-axis IMU (inertial measurement unit): always-on 3-axis accelerometer and 3-axis gyroscope

LGA-14L
(2.5 x 3.0 x 0.83 mm) typ.

Product status link
LSM6DSO

Product summary		
Order code	LSM6DSO	LSM6DSOTR
Temp. range [°C]	-40 to +85	
Package	LGA-14L (2.5 x 3 x 0.83 mm)	
Packing	Tray	Tape and reel

Product resources
AN5192 (device application note)
AN5226 (finite state machine)
TN0018 (design and soldering)

Product label
SUSTAINABLE TECHNOLOGY

Features

- Supply current: 0.55 mA in combo high-performance mode
- “Always-on" experience with low power consumption for both accelerometer and gyroscope
- Smart FIFO up to 9 KB
- Android compliant
- ±2/±4/±8/±16 *g* full scale
- ±125/±250/±500/±1000/±2000 dps full scale
- Analog supply voltage: 1.71 V to 3.6 V
- Independent IO supply (1.62 V)
- Compact footprint: 2.5 mm x 3 mm x 0.83 mm
- SPI / I²C & MIPI I3C^{SM} serial interface with main processor data synchronization
- Auxiliary SPI for OIS data output for gyroscope and accelerometer
- Advanced pedometer, step detector and step counter
- Significant motion detection, tilt detection
- Standard interrupts: free-fall, wake-up, 6D/4D orientation, click and double-click
- Programmable finite state machine: accelerometer, gyroscope, and external sensors
- Embedded temperature sensor
- ECOPACK and RoHS compliant

Applications

- Motion tracking and gesture detection
- Sensor hub
- Indoor navigation
- IoT and connected devices
- Smart power saving for handheld devices
- EIS and OIS for camera applications
- Vibration monitoring and compensation

Description

The LSM6DSO is a 6-axis IMU (inertial measurement unit) system-in-package featuring a 3-axis digital accelerometer and a 3-axis digital gyroscope, boosting performance at 0.55 mA in high-performance mode and enabling always-on low-power features for an optimal motion experience for the consumer.

The LSM6DSO supports the main OS requirements, offering real, virtual, and batch sensors with 9 KB for dynamic data batching. ST's family of MEMS sensor modules leverages the robust and mature manufacturing processes already used for the production of micromachined accelerometers and gyroscopes. The various sensing elements are manufactured using specialized micromachining processes, while the IC interfaces are developed using CMOS technology that allows the design of a dedicated circuit that is trimmed to better match the characteristics of the sensing element.

The LSM6DSO has a full-scale acceleration range of ±2/±4/±8/±16 *g* and an angular rate range of ±125/±250/±500/±1000/±2000 dps.

The LSM6DSO fully supports EIS and OIS applications as the module includes a dedicated configurable signal processing path for OIS and an auxiliary SPI, configurable for both the gyroscope and accelerometer.

High robustness to mechanical shock makes the LSM6DSO the preferred choice of system designers for the creation and manufacturing of reliable products. The LSM6DSO is available in a plastic, land grid array (LGA) package.

1 Overview

The LSM6DSO is a system-in-package featuring a high-performance 3-axis digital accelerometer and 3-axis digital gyroscope.

The LSM6DSO delivers best-in-class motion sensing that can detect orientation and gestures in order to empower application developers and consumers with features and capabilities that are more sophisticated than simply orienting their devices to portrait and landscape mode.

The event-detection interrupts enable efficient and reliable motion tracking and contextual awareness, implementing hardware recognition of free-fall events, 6D orientation, click and double-click sensing, activity or inactivity, stationary/motion detection and wake-up events.

The LSM6DSO supports the main OS requirements, offering real, virtual, and batch mode sensors. In addition, the LSM6DSO can efficiently run the sensor-related features specified in Android, saving power and enabling faster reaction time. In particular, the LSM6DSO has been designed to implement hardware features such as significant motion detection, stationary/motion detection, tilt, pedometer functions, timestamping and to support the data acquisition of an external magnetometer.

The LSM6DSO offers hardware flexibility to connect the pins with different mode connections to external sensors to expand functionalities such as adding a sensor hub, auxiliary SPI, and so forth.

Up to 9 KB of FIFO with compression and dynamic allocation of significant data (that is, external sensors, timestamp, etc.) allows overall power saving of the system.

Like the entire portfolio of MEMS sensor modules, the LSM6DSO leverages the robust and mature in-house manufacturing processes already used for the production of micromachined accelerometers and gyroscopes. The various sensing elements are manufactured using specialized micromachining processes, while the IC interfaces are developed using CMOS technology that allows the design of a dedicated circuit that is trimmed to better match the characteristics of the sensing element.

The LSM6DSO is available in a small plastic land grid array (LGA) package of 2.5 x 3.0 x 0.83 mm to address ultra-compact solutions.

2 Embedded low-power features

The LSM6DSO has been designed to be fully compliant with Android, featuring the following on-chip functions:

- 9 KB data buffering, data can be compressed two or three times
  - 100% efficiency with flexible configurations and partitioning
  - Possibility to store timestamp
- Event-detection interrupts (fully configurable)
  - Free-fall
  - Wake-up
  - 6D orientation
  - Click and double-click sensing
  - Activity/inactivity recognition
  - Stationary/motion detection
- Specific IP blocks with negligible power consumption and high-performance
  - Pedometer functions: step detector and step counters
  - Tilt
  - Significant motion detection
  - Finite state machine (FSM) for accelerometer, gyroscope, and external sensors
- Sensor hub
  - Up to six total sensors: two internal (accelerometer and gyroscope) and four external sensors

2.1 Tilt detection

The tilt function helps to detect activity change and has been implemented in hardware using only the accelerometer to achieve targets of both ultralow power consumption and robustness during the short duration of dynamic accelerations.

The tilt function is based on a trigger of an event each time the device's tilt changes and can be used with different scenarios, for example:

1. Triggers when the phone is in a front pants pocket and the user goes from sitting to standing or standing to sitting
2. Does not trigger when the phone is in a front pants pocket and the user is walking, running, or going upstairs

2.2 Significant motion detection

The significant motion detection (SMD) function generates an interrupt when a ‘significant motion’, that could be due to a change in user location, is detected. In the LSM6DSO device, this function has been implemented in the hardware using only the accelerometer.

SMD functionality can be used in location-based applications in order to receive a notification indicating when the user is changing location.

2.3 Finite state machine

The LSM6DSO can be configured to generate interrupt signals activated by user-defined motion patterns. To do this, up to 16 embedded finite state machines can be programmed independently for motion detection such as glance gestures, absolute wrist tilt, shake and double-shake detection.

Definition of finite state machine

A state machine is a mathematical abstraction used to design logic connections. It is a behavioral model composed of a finite number of states and transitions between states, similar to a flow chart in which one can inspect the way logic runs when certain conditions are met. The state machine begins with a start state, goes to different states through transitions dependent on the inputs, and can finally end in a specific state (called stop state). The current state is determined by the past states of the system. Figure 1. Generic state machine shows a generic state machine.

Figure 1. Generic state machine

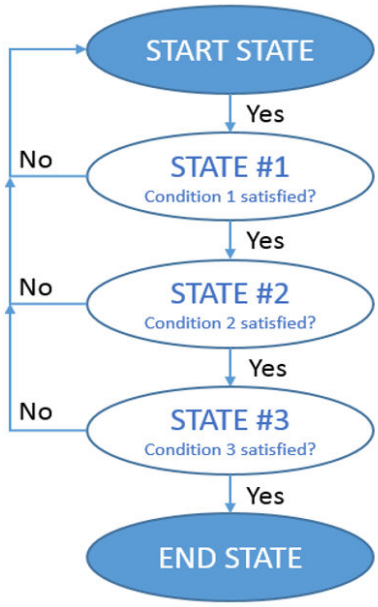

Finite state machine in the LSM6DSO

The LSM6DSO works as a combo accelerometer-gyroscope sensor, generating acceleration and angular rate output data. It is also possible to connect an external sensor (magnetometer) by using the sensor hub feature (mode 2). These data can be used as input for up to 16 programs in the embedded finite state machine (Figure 2. State machine in the LSM6DSO).

All 16 finite state machines are independent: each one has its dedicated memory area and it is independently executed. An interrupt is generated when the end state is reached or when some specific command is performed.

Figure 2. State machine in the LSM6DSO

3 Pin description

Figure 3. Pin connections

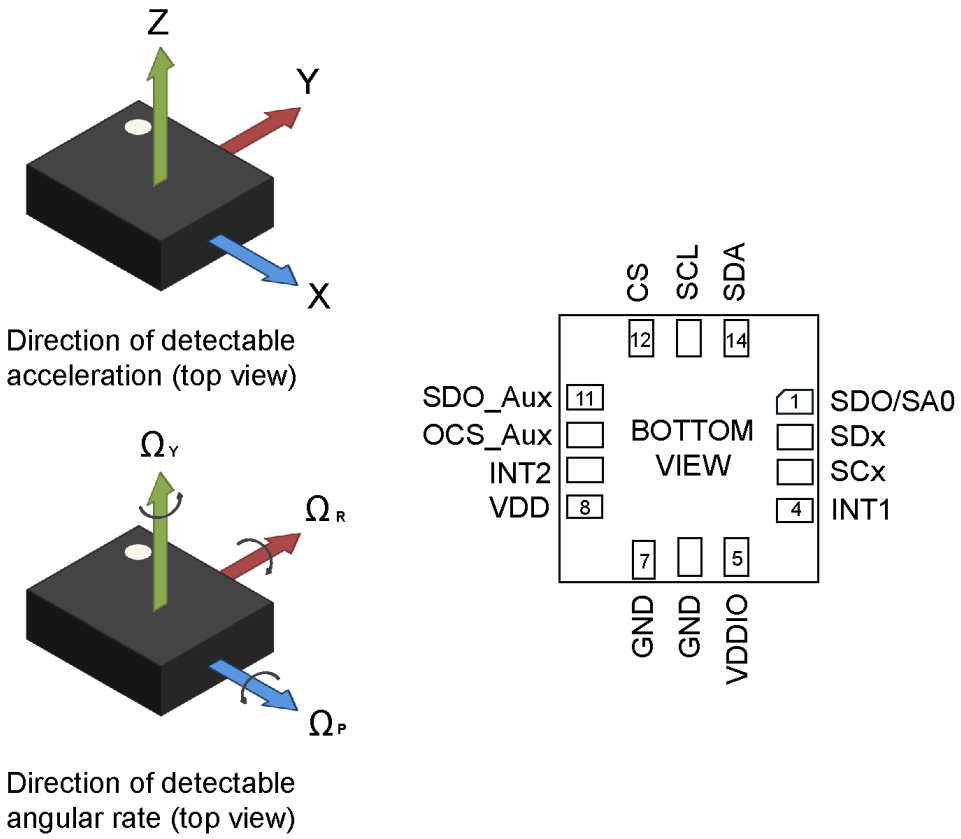

3.1 Pin connections

The LSM6DSO offers flexibility to connect the pins in order to have four different mode connections and functionalities. In detail:

- **Mode 1**: I²C / MIPI I3C^{SM} slave interface or SPI (3- and 4-wire) serial interface is available.
- **Mode 2**: I²C / MIPI I3C^{SM} slave interface or SPI (3- and 4-wire) serial interface and I²C master interface for external sensor connections are available.
- **Mode 3:** I²C / MIPI I3C^{SM} slave interface or SPI (3- and 4-wire) serial interface is available for the application processor interface while an auxiliary SPI (3- and 4-wire) serial interface for external sensor connections is available for the gyroscope ONLY.
- **Mode 4:** I²C / MIPI I3C^{SM} slave interface or SPI (3- and 4-wire) serial interface is available for the application processor interface while an auxiliary SPI (3- and 4-wire) serial interface for external sensor connections is available for the accelerometer and gyroscope.

Figure 4. LSM6DSO connection modes

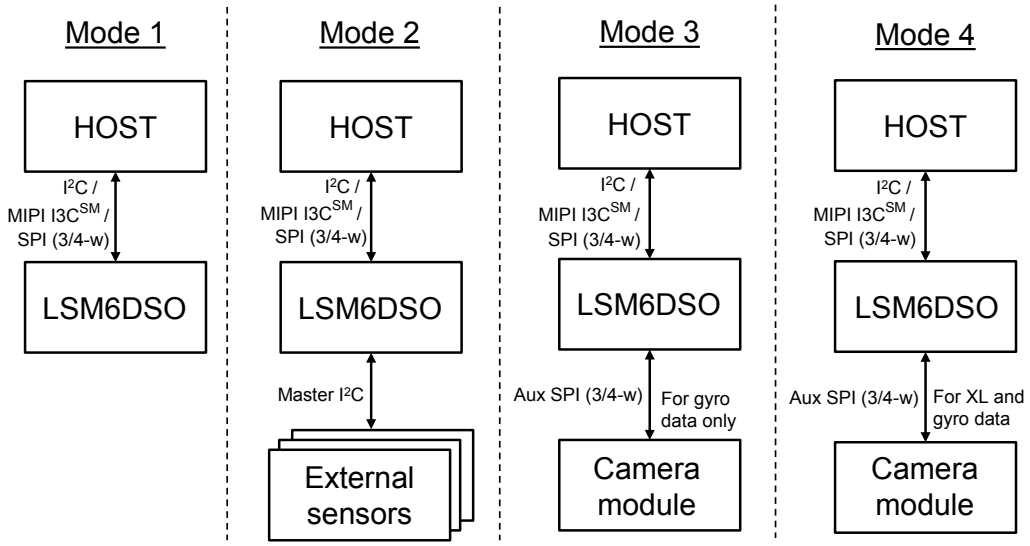

In the following table, each mode is described for the pin connections and function.

Table 1. Pin description

Pin #	Name	Mode 1 function	Mode 2 function	Mode 3 / mode 4 function
1	SDO/SA0	SPI 4-wire interface serial data output (SDO) I²C least significant bit of the device address (SA0)	SPI 4-wire interface serial data output (SDO) I²C least significant bit of the device address (SA0)	SPI 4-wire interface serial data output (SDO) I²C least significant bit of the device address (SA0)
2	SDx	Connect to VDDIO or GND	I²C master serial data (MSDA)	Auxiliary SPI 3/4-wire interface serial data input (SDI_Aux) and SPI 3-wire serial data output (SDO_Aux)
3	SCx	Connect to VDDIO or GND	I²C master serial clock (MSCL)	Auxiliary SPI 3/4-wire interface serial port clock (SPC_Aux)
4	INT1	Programmable interrupt in I²C and SPI		
5	VDDIO(1)	Power supply for I/O pins		
6	GND	0 V supply		
7	GND	0 V supply		
8	VDD(1)	Power supply		
9	INT2	Programmable interrupt 2 (INT2) / Data enabled (DEN)	Programmable interrupt 2 (INT2)/ Data enabled (DEN)/I²C master external synchronization signal (MDRDY)	Programmable interrupt 2 (INT2) / Data enabled (DEN)
10	OCS_Aux	Leave unconnected(2)	Leave unconnected(2)	Enable auxiliary SPI 3/4-wire interface
11	SDO_Aux	Connect to VDDIO or leave unconnected(2)	Connect to VDDIO or leave unconnected(2)	Auxiliary SPI 3-wire interface: leave unconnected(2) Auxiliary SPI 4-wire interface: serial data output (SDO_Aux)
12	CS	I²C/MIPI I3C^{SM}/SPI mode selection (1: SPI idle mode / I²C/MIPI I3C^{SM} communication enabled; 0: SPI communication mode / I²C/MIPI I3C^{SM} disabled)	I²C/MIPI I3C^{SM}/SPI mode selection (1: SPI idle mode / I²C/MIPI I3C^{SM} communication enabled; 0: SPI communication mode / I²C/ MIPI I3C^{SM} disabled)	I²C/MIPI I3C^{SM}/SPI mode selection (1: SPI idle mode / I²C/MIPI I3C^{SM} communication enabled; 0: SPI communication mode / I²C/ MIPI I3C^{SM} disabled)
13	SCL	I²C/MIPI I3C^{SM} serial clock (SCL) SPI serial port clock (SPC)	I²C/MIPI I3C^{SM} serial clock (SCL) SPI serial port clock (SPC)	I²C/MIPI I3C^{SM} serial clock (SCL) SPI serial port clock (SPC)
14	SDA	I²C/MIPI I3C^{SM} serial data (SDA) SPI serial data input (SDI) 3-wire interface serial data output (SDO)	I²C/MIPI I3C^{SM} serial data (SDA) SPI serial data input (SDI) 3-wire interface serial data output (SDO)	I²C/MIPI I3C^{SM} serial data (SDA) SPI serial data input (SDI) 3-wire interface serial data output (SDO)

1. *Recommended 100 nF filter capacitor.*
2. *Leave pin electrically unconnected and soldered to PCB.*

4 Module specifications

4.1 Mechanical characteristics

@VDD = 1.8 V, T = 25°C, unless otherwise noted.

Table 2. Mechanical characteristics

Symbol	Parameter	Test conditions	Min.	Typ.[1]	Max.	Unit
LA_FS	Linear acceleration measurement range			±2		*g*
				±4		
				±8		
				±16		
G_FS	Angular rate measurement range			±125		dps
				±250		
				±500		
				±1000		
				±2000		
LA_So	Linear acceleration sensitivity[2]	FS = ±2 *g*		0.061		mg/LSB
		FS = ±4 *g*		0.122		
		FS = ±8 *g*		0.244		
		FS = ±16 *g*		0.488		
G_So	Angular rate sensitivity[2]	FS = ±125 dps		4.375		mdps/LSB
		FS = ±250 dps		8.75		
		FS = ±500 dps		17.50		
		FS = ±1000 dps		35		
		FS = ±2000 dps		70		
G_So%	Sensitivity tolerance[3]	at component level		±1		%
LA_SoDr	Linear acceleration sensitivity change vs. temperature[4]	from -40° to +85°		±0.01		%/°C
G_SoDr	Angular rate sensitivity change vs. temperature[4]	from -40° to +85°		±0.007		%/°C
LA_TyOff	Linear acceleration zero-*g* level offset accuracy[5]			±20		m*g*
G_TyOff	Angular rate zero-rate level[5]			±1		dps
LA_OffDr	Linear acceleration zero-*g* level change vs. temperature[4]			±0.1		m*g*/°C
G_OffDr	Angular rate typical zero-rate level change vs. temperature[4]			±0.010		dps/°C
Rn	Rate noise density in high-performance mode[6]			3.8		mdps/√Hz
RnRMS	Gyroscope RMS noise in normal/low-power mode[7]			75		mdps
An	Acceleration noise density in high-performance mode[8]	FS = ±2 *g*		70		µ*g*/√Hz
		FS = ±4 *g*		75		
		FS = ±8 *g*		80		
		FS = ±16 *g*		110		
RMS	Acceleration RMS noise in normal/low-power mode[9][10]	FS = ±2 *g*		1.8		m*g*(RMS)
		FS = ±4 *g*		2.0		
		FS = ±8 *g*		2.4		

Symbol	Parameter	Test conditions	Min.	Typ.[1]	Max.	Unit
RMS	Acceleration RMS noise in normal/low-power mode[9][10]	FS = ±16 *g*		3.0		mg(RMS)
	Acceleration RMS noise in ultralow-power mode[9][10]	FS = ±2 *g*		5.5		
LA_ODR	Linear acceleration output data rate			1.6[11] 12.5 26 52 104 208 416 833 1666 3332 6664		Hz
G_ODR	Angular rate output data rate			12.5 26 52 104 208 416 833 1666 3332 6664		
Vst	Linear acceleration self-test output change[12][13][14]		50		1700	mg
	Angular rate self-test output change[15][16]	FS = ±250 dps	20		80	dps
		FS = ±2000 dps	150		700	dps
Top	Operating temperature range		-40		+85	°C

1. *Typical specifications are not guaranteed.*
2. *Sensitivity values after factory calibration test and trimming.*
3. *Subject to change.*
4. *Measurements are performed in a uniform temperature setup and they are based on characterization data in a limited number of samples. Not measured during final test for production.*
5. *Values after factory calibration test and trimming.*
6. *Gyroscope rate noise density in high-performance mode is independent of the ODR and FS setting.*
7. *Gyroscope RMS noise in normal/low-power mode is independent of the ODR and FS setting.*
8. *Accelerometer noise density in high-performance mode is independent of the ODR.*
9. *Accelerometer RMS noise in normal/low-power/ultralow-power mode is independent of the ODR.*
10. *Noise RMS related to BW = ODR/2.*
11. *This ODR is available when the accelerometer is in low-power mode.*
12. *The sign of the linear acceleration self-test output change is defined by the STx_XL bits in a dedicated register for all axes.*
13. *The linear acceleration self-test output change is defined with the device in stationary condition as the absolute value of: OUTPUT[LSb] (self-test enabled) - OUTPUT[LSb] (self-test disabled). 1LSb = 0.061 mg at ±2 g full scale.*
14. *Accelerometer self-test limits are full-scale independent.*
15. *The sign of the angular rate self-test output change is defined by the STx_G bits in a dedicated register for all axes.*
16. *The angular rate self-test output change is defined with the device in stationary condition as the absolute value of: OUTPUT[LSb] (self-test enabled) - OUTPUT[LSb] (self-test disabled). 1LSb = 70 mdps at ±2000 dps full scale.*

4.2 Electrical characteristics

@VDD = 1.8 V, T = 25°C, unless otherwise noted.

Table 3. Electrical characteristics

Symbol	Parameter	Test conditions	Min.	Typ.[1]	Max.	Unit
VDD	Supply voltage		1.71	1.8	3.6	V
VDDIO	Power supply for I/O		1.62		3.6	V
IddHP	Gyroscope and accelerometer supply current in high-performance mode			0.55		mA
LA_IddHP	Accelerometer supply current in high-performance mode			170		µA
LA_IddLP	Accelerometer supply current in low-power mode	ODR = 52 Hz ODR = 1.6 Hz		26 4.5		µA
LA_IddULP	Accelerometer supply current in ultralow-power mode	ODR = 52 Hz ODR = 1.6 Hz		9.5 4.4		µA
IddPD	Gyroscope and accelerometer supply current during power-down			3		µA
Ton	Turn-on time			35		ms
V_{IH}	Digital high-level input voltage		0.7 * VDDIO			V
V_{IL}	Digital low-level input voltage				0.3 * VDDIO	V
V_{OH}	High-level output voltage	I_{OH} = 4 mA[2]	VDDIO - 0.2			V
V_{OL}	Low-level output voltage	I_{OL} = 4 mA[2]			0.2	V
Top	Operating temperature range		-40		+85	°C

1. *Typical specifications are not guaranteed.*
2. *4 mA is the maximum driving capability, that is, the maximum DC current that can be sourced/sunk by the digital pin in order to guarantee the correct digital output voltage levels V_{OH} and V_{OL}.*

4.3 Temperature sensor characteristics

@VDD = 1.8 V, T = 25°C unless otherwise noted.

Table 4. Temperature sensor characteristics

Symbol	Parameter	Test condition	Min.	Typ.[1]	Max.	Unit
TODR[2]	Temperature refresh rate			52		Hz
Toff	Temperature offset[3]		-15		+15	°C
TSen	Temperature sensitivity			256		LSB/°C
TST	Temperature stabilization time[4]				500	µs
T_ADC_res	Temperature ADC resolution			16		bit
Top	Operating temperature range		-40		+85	°C

1. *Typical specifications are not guaranteed.*
2. *When the accelerometer is in low-power mode or ultra-low-power mode and the gyroscope part is turned off, the TODR value is equal to the accelerometer ODR.*
3. *The output of the temperature sensor is 0 LSB (typ.) at 25°C.*
4. *Time from power ON to valid data based on characterization data.*

4.4 Communication interface characteristics

4.4.1 SPI - serial peripheral interface

Subject to general operating conditions for VDD and Top.

Table 5. SPI slave timing values (in mode 3)

Symbol	Parameter	Value[1]		Unit
		Min	Max	
$t_{c(SPC)}$	SPI clock cycle	100		ns
$f_{c(SPC)}$	SPI clock frequency		10	MHz
$t_{su(CS)}$	CS setup time	5		ns
$t_{h(CS)}$	CS hold time	20		
$t_{su(SI)}$	SDI input setup time	5		
$t_{h(SI)}$	SDI input hold time	15		
$t_{v(SO)}$	SDO valid output time		50	
$t_{h(SO)}$	SDO output hold time	5		
$t_{dis(SO)}$	SDO output disable time		50	

1. *Values are evaluated at 10 MHz clock frequency for SPI with both 3 and 4 wires, based on characterization results, not tested in production.*

Figure 5. SPI slave timing diagram (in mode 3)

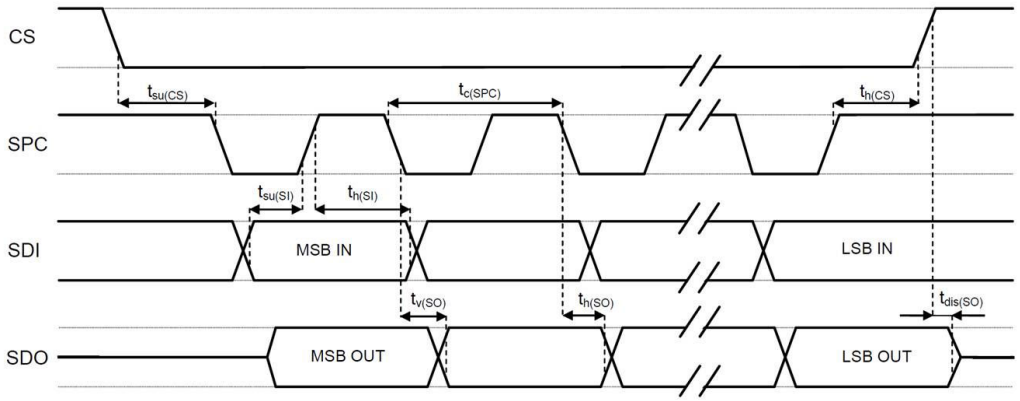

Note: Measurement points are done at 0.3·VDDIO and 0.7·VDDIO for both input and output ports.

4.4.2 I²C - inter-IC control interface

Subject to general operating conditions for VDD and Top.

Table 6. I²C slave timing values

Symbol	Parameter	I²C standard mode(1)		I²C fast mode (1)		Unit
		Min	Max	Min	Max	
$f_{(SCL)}$	SCL clock frequency	0	100	0	400	kHz
$t_{w(SCLL)}$	SCL clock low time	4.7		1.3		µs
$t_{w(SCLH)}$	SCL clock high time	4.0		0.6		
$t_{su(SDA)}$	SDA setup time	250		100		ns
$t_{h(SDA)}$	SDA data hold time	0	3.45	0	0.9	µs
$t_{h(ST)}$	START condition hold time	4		0.6		µs
$t_{su(SR)}$	Repeated START condition setup time	4.7		0.6		
$t_{su(SP)}$	STOP condition setup time	4		0.6		
$t_{w(SP:SR)}$	Bus free time between STOP and START condition	4.7		1.3		

1. *Data based on standard I²C protocol requirement, not tested in production.*

Figure 6. I²C slave timing diagram

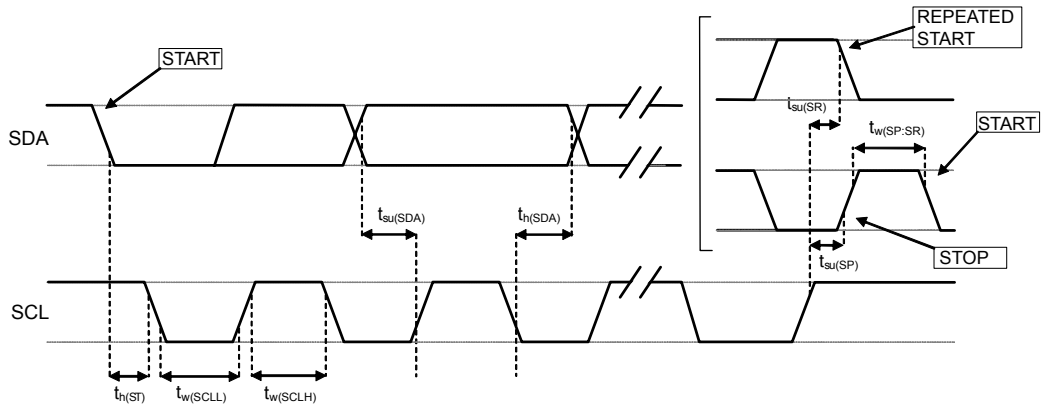

Note: Measurement points are done at 0.3·VDDIO and 0.7·VDDIO for both ports.

4.5 Absolute maximum ratings

Stresses above those listed as “absolute maximum ratings” may cause permanent damage to the device. This is a stress rating only and functional operation of the device under these conditions is not implied. Exposure to maximum rating conditions for extended periods may affect device reliability.

Table 7. Absolute maximum ratings

Symbol	Ratings	Maximum value	Unit
VDD	Supply voltage	-0.3 to +4.8	V
T_{STG}	Storage temperature range	-40 to +125	°C
Sg	Acceleration *g* for 0.2 ms	20,000	*g*
ESD	Electrostatic discharge protection (HBM)	2	kV
Vin	Input voltage on any control pin (including CS, SCL/SPC, SDA/SDI/SDO, SDO/SA0)	-0.3 to VDDIO +0.3	V

Note: Supply voltage on any pin should never exceed 4.8 V.

This device is sensitive to mechanical shock, improper handling can cause permanent damage to the part.

This device is sensitive to electrostatic discharge (ESD), improper handling can cause permanent damage to the part.

4.6 Terminology

4.6.1 Sensitivity

Linear acceleration sensitivity can be determined, for example, by applying 1 *g* acceleration to the device. Because the sensor can measure DC accelerations, this can be done easily by pointing the selected axis towards the ground, noting the output value, rotating the sensor 180 degrees (pointing towards the sky), and noting the output value again. By doing so, ±1 *g* acceleration is applied to the sensor. Subtracting the larger output value from the smaller one, and dividing the result by 2, leads to the actual sensitivity of the sensor. This value changes very little over temperature and over time. The sensitivity tolerance describes the range of sensitivities of a large number of sensors (see Table 2).

An angular rate gyroscope is a device that produces a positive-going digital output for counterclockwise rotation around the axis considered. Sensitivity describes the gain of the sensor and can be determined by applying a defined angular velocity to it. This value changes very little over temperature and time (see Table 2).

4.6.2 Zero-*g* and zero-rate level

Linear acceleration zero-*g* level offset (TyOff) describes the deviation of an actual output signal from the ideal output signal if no acceleration is present. A sensor in a steady state on a horizontal surface measures 0 *g* on both the X-axis and Y-axis, whereas the Z-axis measures 1 *g*. Ideally, the output is in the middle of the dynamic range of the sensor (content of OUT registers 00h, data expressed as two's complement number). A deviation from the ideal value in this case is called zero-*g* offset.

Offset is to some extent a result of stress to the MEMS sensor and therefore the offset can slightly change after mounting the sensor onto a printed circuit board or exposing it to extensive mechanical stress. Offset changes little over temperature, see "Linear acceleration zero-*g* level change vs. temperature" in Table 2. Mechanical characteristics. The zero-*g* level tolerance (TyOff) describes the standard deviation of the range of zero-g levels of a group of sensors.

Zero-rate level describes the actual output signal if there is no angular rate present. The zero-rate level of precise MEMS sensors is, to some extent, a result of stress to the sensor and therefore the zero-rate level can slightly change after mounting the sensor onto a printed circuit board or after exposing it to extensive mechanical stress. This value changes very little over temperature and time (see Table 2. Mechanical characteristics).

5 Digital interfaces

5.1 I²C/SPI interface

The registers embedded inside the LSM6DSO may be accessed through both the I²C and SPI serial interfaces. The latter may be software configured to operate either in 3-wire or 4-wire interface mode. The device is compatible with SPI modes 0 and 3.

The serial interfaces are mapped onto the same pins. To select/exploit the I²C interface, the CS line must be tied high (that is, connected to VDDIO).

Table 8. Serial interface pin description

Pin name	Pin description
CS	Enable SPI I²C/SPI mode selection (1: SPI idle mode / I²C communication enabled; 0: SPI communication mode / I²C disabled)
SCL/SPC	I²C serial clock (SCL) SPI serial port clock (SPC)
SDA/SDI/SDO	I²C serial data (SDA) SPI serial data input (SDI) 3-wire interface serial data output (SDO)
SDO/SA0	SPI serial data output (SDO) I²C less significant bit of the device address

5.1.1 I²C serial interface

The LSM6DSO I²C is a bus slave. The I²C is employed to write the data to the registers, whose content can also be read back.

The relevant I²C terminology is provided in the table below.

Table 9. I²C terminology

Term	Description
Transmitter	The device that sends data to the bus
Receiver	The device that receives data from the bus
Master	The device that initiates a transfer, generates clock signals, and terminates a transfer
Slave	The device addressed by the master

There are two signals associated with the I²C bus: the serial clock line (SCL) and the serial data line (SDA). The latter is a bidirectional line used for sending and receiving the data to/from the interface. Both the lines must be connected to VDDIO through external pull-up resistors. When the bus is free, both the lines are high.

The I²C interface is implemented with fast mode (400 kHz) I²C standards as well as with the standard mode.

In order to disable the I²C block, (I2C_disable) = 1 must be written in CTRL4_C (13h).

I²C operation

The transaction on the bus is started through a start (ST) signal. A start condition is defined as a high to low transition on the data line while the SCL line is held high. After this has been transmitted by the master, the bus is considered busy. The next byte of data transmitted after the start condition contains the address of the slave in the first 7 bits and the eighth bit tells whether the master is receiving data from the slave or transmitting data to the slave. When an address is sent, each device in the system compares the first seven bits after a start condition with its address. If they match, the device considers itself addressed by the master.

The slave address (SAD) associated to the LSM6DSO is 110101x. The SDO/SA0 pin can be used to modify the less significant bit of the device address. If the SDO/SA0 pin is connected to the supply voltage, LSb is 1 (address 1101011); else if the SDO/SA0 pin is connected to ground, the LSb value is 0 (address 1101010b). This solution permits connecting and addressing two different inertial modules to the same I²C bus.

Data transfer with acknowledge is mandatory. The transmitter must release the SDA line during the acknowledge pulse. The receiver must then pull the data line low so that it remains stable low during the high period of the acknowledge clock pulse. A receiver that has been addressed is obliged to generate an acknowledge after each byte of data received.

The I²C embedded inside the LSM6DSO behaves like a slave device and the following protocol must be adhered to. After the start condition (ST) a slave address is sent, once a slave acknowledge (SAK) has been returned, an 8-bit subaddress (SUB) is transmitted. The increment of the address is configured by the CTRL3_C (12h) (IF_INC).

The slave address is completed with a read/write bit. If the bit is 1 (read), a repeated start (SR) condition must be issued after the two subaddress bytes; if the bit is 0 (write) the master transmits to the slave with direction unchanged. Table 10 explains how the SAD+read/write bit pattern is composed, listing all the possible configurations.

Table 10. SAD+read/write patterns

Command	SAD[6:1]	SAD[0] = SA0	R/W	SAD+R/W
Read	110101	0	1	11010101 (D5h)
Write	110101	0	0	11010100 (D4h)
Read	110101	1	1	11010111 (D7h)
Write	110101	1	0	11010110 (D6h)

Table 11. Transfer when master is writing one byte to slave

Master	ST	SAD + W		SUB		DATA		SP
Slave			SAK		SAK		SAK	

Table 12. Transfer when master is writing multiple bytes to slave

Master	ST	SAD + W		SUB		DATA		DATA		SP
Slave			SAK		SAK		SAK		SAK	

Table 13. Transfer when master is receiving (reading) one byte of data from slave

Master	ST	SAD + W		SUB		SR	SAD + R			NMAK	SP
Slave			SAK		SAK			SAK	DATA		

Table 14. Transfer when master is receiving (reading) multiple bytes of data from slave

Master	ST	SAD+ W		SUB		SR	SAD+ R			MAK		MAK		NMAK	SP
Slave			SAK		SAK			SAK	DATA		DATA		DATA		

Data are transmitted in byte format (DATA). Each data transfer contains 8 bits. The number of bytes transferred per transfer is unlimited. Data is transferred with the most significant bit (MSb) first. If a slave receiver does not acknowledge the slave address (that is, it is not able to receive because it is performing some real-time function) the data line must be left high by the slave. The master can then abort the transfer. A low to high transition on the SDA line while the SCL line is high is defined as a stop condition. Each data transfer must be terminated by the generation of a stop (SP) condition.

In the presented communication format MAK is master acknowledge and NMAK is no master acknowledge.

5.1.2 SPI bus interface

The LSM6DSO SPI is a bus slave. The SPI allows writing and reading the registers of the device.

The serial interface communicates with the application using four wires: **CS**, **SPC**, **SDI**, and **SDO**.

Figure 7. Read and write protocol (in mode 3)

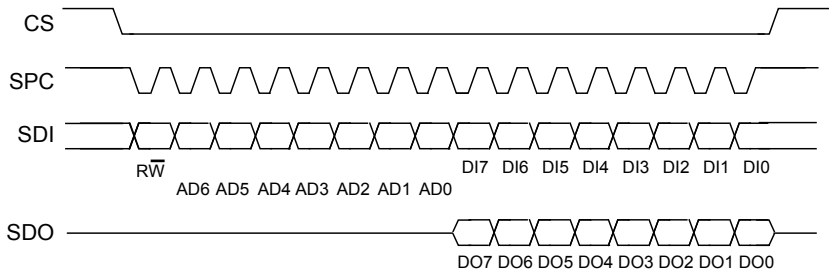

CS enables the serial port and it is controlled by the SPI master. It goes low at the start of the transmission and goes back high at the end. **SPC** is the serial port clock and it is controlled by the SPI master. It is stopped high when **CS** is high (no transmission). **SDI** and **SDO** are, respectively, the serial port data input and output. Those lines are driven at the falling edge of **SPC** and should be captured at the rising edge of **SPC**.

Both the read register and write register commands are completed in 16 clock pulses or in multiples of 8 in case of multiple read/write bytes. Bit duration is the time between two falling edges of **SPC**. The first bit (bit 0) starts at the first falling edge of **SPC** after the falling edge of **CS** while the last bit (bit 15, bit 23, ...) starts at the last falling edge of SPC just before the rising edge of **CS**.

bit 0: RW bit. When 0, the data DI(7:0) is written into the device. When 1, the data DO(7:0) from the device is read. In the latter case, the chip drives **SDO** at the start of bit 8.

bit 1-7: address AD(6:0). This is the address field of the indexed register.

bit 8-15: data DI(7:0) (write mode). This is the data that is written into the device (MSb first).

bit 8-15: data DO(7:0) (read mode). This is the data that is read from the device (MSb first).

In multiple read/write commands further blocks of 8 clock periods are added. When the CTRL3_C (12h) (IF_INC) bit is 0, the address used to read/write data remains the same for every block. When the CTRL3_C (12h) (IF_INC) bit is 1, the address used to read/write data is increased at every block.

The function and the behavior of **SDI** and **SDO** remain unchanged.

5.1.2.1 SPI read

Figure 8. SPI read protocol (in mode 3)

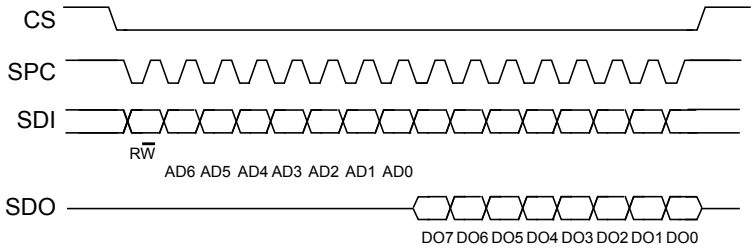

The SPI read command is performed with 16 clock pulses. A multiple byte read command is performed by adding blocks of 8 clock pulses to the previous one.

bit 0: READ bit. The value is 1.

bit 1-7: address AD(6:0). This is the address field of the indexed register.

bit 8-15: data DO(7:0) (read mode). This is the data that is read from the device (MSb first).

bit 16-...: data DO(...-8). Further data in multiple byte reads.

Figure 9. Multiple byte SPI read protocol (2-byte example) (in mode 3)

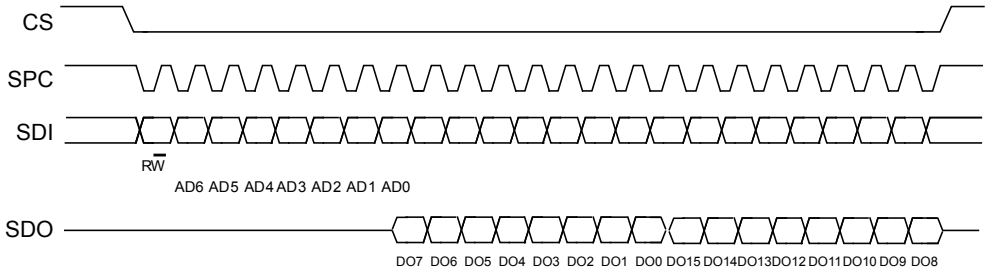

5.1.2.2 SPI write

Figure 10. **SPI write protocol (in mode 3)**

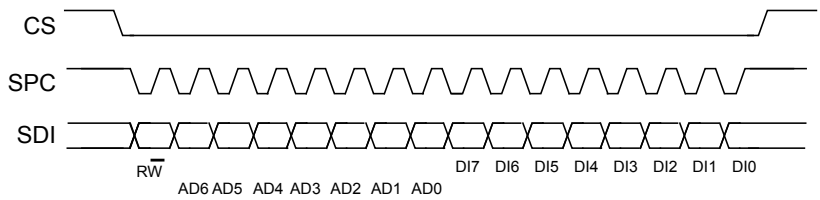

The SPI write command is performed with 16 clock pulses. A multiple byte write command is performed by adding blocks of 8 clock pulses to the previous one.

bit 0: WRITE bit. The value is 0.

bit 1 -7: address AD(6:0). This is the address field of the indexed register.

bit 8-15: data DI(7:0) (write mode). This is the data that is written inside the device (MSb first).

bit 16-... : data DI(...-8). Further data in multiple byte writes.

Figure 11. **Multiple byte SPI write protocol (2-byte example) (in mode 3)**

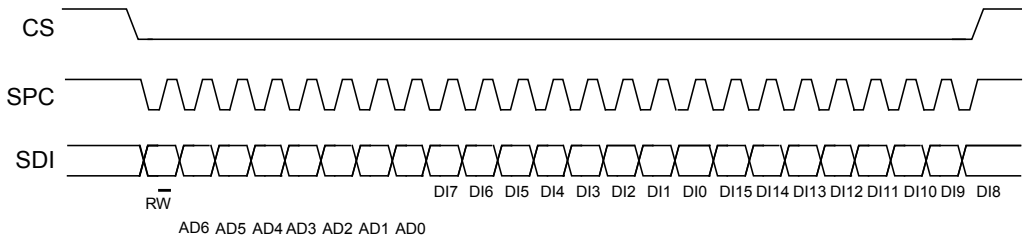

5.1.2.3 *SPI read in 3-wire mode*

A 3-wire mode is entered by setting the CTRL3_C (12h) (SIM) bit equal to 1 (SPI serial interface mode selection).

Figure 12. SPI read protocol in 3-wire mode (in mode 3)

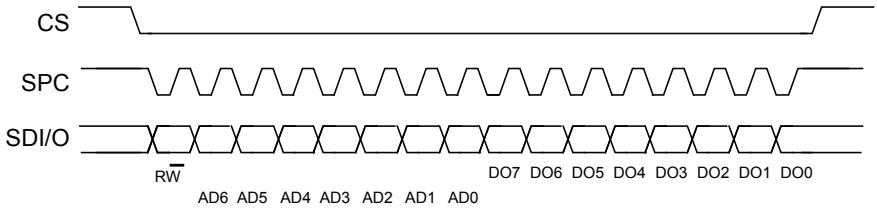

The SPI read command is performed with 16 clock pulses:

bit 0: READ bit. The value is 1.

bit 1-7: address AD(6:0). This is the address field of the indexed register.

bit 8-15: data DO(7:0) (read mode). This is the data that is read from the device (MSb first).

A multiple read command is also available in 3-wire mode.

5.2 MIPI I3C^{SM} interface

5.2.1 MIPI I3C^{SM} slave interface

The LSM6DSO interface includes a MIPI I3C^{SM} SDR only slave interface (compliant with release 1.0 of the specification) with MIPI I3C^{SM} SDR embedded features:

- CCC command
- Direct CCC communication (SET and GET)
- Broadcast CCC communication
- Private communications
- Private read and write for single byte
- Multiple read and write
- In-band interrupt request
- Error detection and recovery methods (S0-S6)

Note: *Refer to Section 5.3: I²C/MIPI I3C^{SM} coexistence in LSM6DSO for details regarding the choice of the interface when powering up the device.*

5.2.2 MIPI I3C^{SM} CCC supported commands

The list of MIPI I3C^{SM} CCC commands supported by the device is detailed in the following table.

Table 15. MIPI I3C^{SM} CCC commands

Command	Command code	Default	Description
ENTDAA	0x07		DAA procedure
SETDASA	0x87		Assign dynamic address using static address 0x6B/0x6A depending on SDO pin
ENEC	0x80 / 0x00		Slave activity control (direct and broadcast)
DISEC	0x81/ 0x01		Slave activity control (direct and broadcast)
ENTAS0	0x82 / 0x02		Enter activity state (direct and broadcast)
ENTAS1	0x83 / 0x03		Enter activity state (direct and broadcast)
ENTAS2	0x84 / 0x04		Enter activity state (direct and broadcast)
ENTAS3	0x85 / 0x05		Enter activity state (direct and broadcast)
SETXTIME	0x98 / 0x28		Timing information exchange
GETXTIME	0x99	0x07 0x00 0x05 0x92	Timing information exchange
RSTDAA	0x86 / 0x06		Reset the assigned dynamic address (direct and broadcast)
SETMWL	0x89 / 0x08		Define maximum write length during private write (direct and broadcast)
SETMRL	0x8A / 0x09		Define maximum read length during private read (direct and broadcast)
SETNEWDA	0x88		Change dynamic address
GETMWL	0x8B	0x00 0x08 (2 byte)	Get maximum write length during private write
GETMRL	0x8C	0x00 0x10 0x09 (3 byte)	Get maximum read length during private read
GETPID	0x8D	0x02 0x08 0x00 0x6C 0x10 0x0B	Device ID register
GETBCR	0x8E	0x07 (1 byte)	Bus characteristics register
GETDCR	0x8F	0x44 default	MIPI I3C^{SM} device characteristics register
GETSTATUS	0x90	0x00 0x00 (2 byte)	Status register
GETMXDS	0x94	0x00 0x20 (2 byte)	Return max data speed

5.3 I²C/MIPI I3C^{SM} coexistence in LSM6DSO

In the LSM6DSO, the SDA and SCL lines are common to both I²C and I3C. The I²C bus requires antispike filters on the SDA and SCL pins that are not compatible with I3C timing.

The device can be connected to both I²C and I3C or only to the I3C bus depending on the connection of the INT1 pin when the device is powered up:

- INT1 pin floating (internal pull-down): I²C/I3C both active, see Figure 13
- INT1 pin connected to VDDIO: only I3C active, see Figure 14

Figure 13. I²C and I3C both active (INT1 pin not connected)

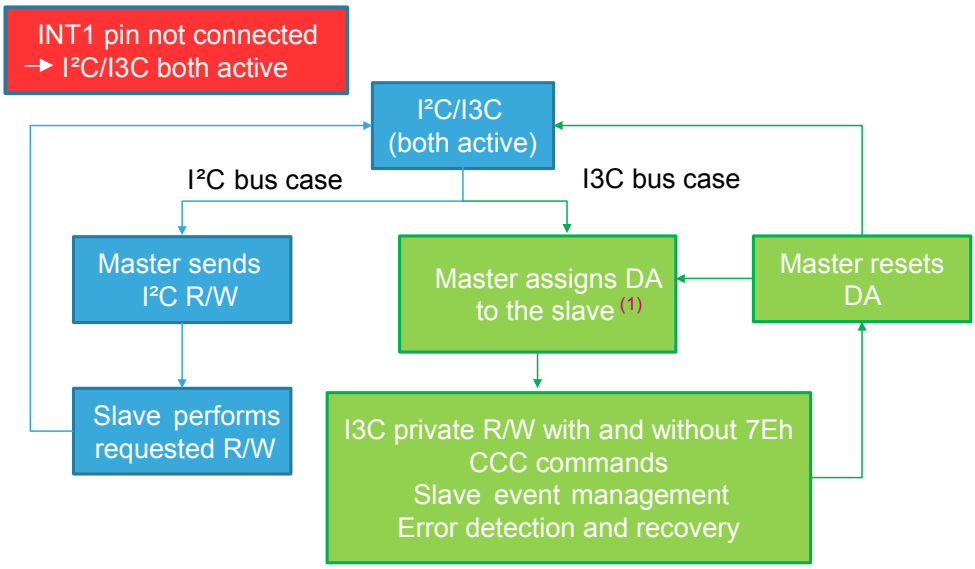

1. *Address assignment (DAA or ENTDA) must be performed with I²C fast mode plus timing. When the slave is addressed, the I²C slave is disabled and the timing is compatible with MIPI I3C^{SM} specifications.*

Figure 14. Only I3C active (INT1 pin connected to VDDIO)

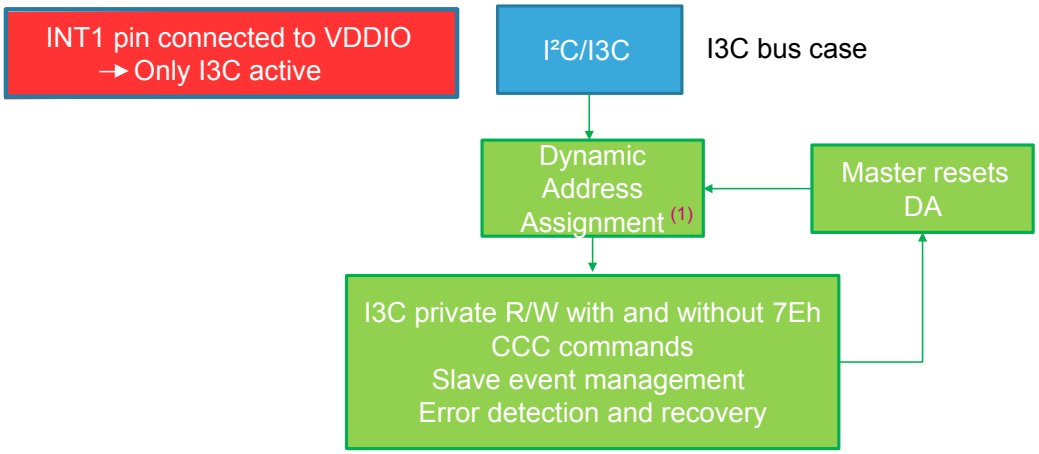

1. *When the slave is I3C only, the I²C slave is always disabled. The address can be assigned using MIPI I3C^{SM} SDR timing.*

5.4 Master I²C interface

If the LSM6DSO is configured in mode 2, a master I²C line is available. The master serial interface is mapped in the following dedicated pins.

Table 16. Master I²C pin details

Pin name	Pin description
MSCL	I²C serial clock master
MSDA	I²C serial data master
MDRDY	I²C master external synchronization signal

5.5 Auxiliary SPI interface

If the LSM6DSO is configured in mode 3 or mode 4, the auxiliary SPI is available. The auxiliary SPI interface is mapped to the following dedicated pins.

Table 17. Auxiliary SPI pin details

Pin name	Pin description
OCS_Aux	Auxiliary SPI 3/4-wire enable
SDx	Auxiliary SPI 3/4-wire data input (SDI_Aux) and SPI 3-wire data output (SDO_Aux)
SCx	Auxiliary SPI 3/4-wire interface serial port clock
SDO_Aux	Auxiliary SPI 4-wire data output (SDO_Aux)

When the LSM6DSO is configured in mode 3 or mode 4, the auxiliary SPI can be connected to a camera module for OIS/EIS support. In this configuration, the auxiliary SPI can write only to the dedicated registers INT_OIS (6Fh), CTRL1_OIS (70h), CTRL2_OIS (71h), CTRL3_OIS (72h). All the registers are accessible in read mode from both the primary interface and auxiliary SPI.

Mode 3 is enabled when the OIS_EN_SPI2 bit in the CTRL1_OIS (70h) register is set to 1.

Mode 4 is enabled when both the OIS_EN_SPI2 bit and the Mode4_EN bit in the CTRL1_OIS (70h) register are set to 1.

6 Functionality

6.1 Operating modes

In the LSM6DSO, the accelerometer and the gyroscope can be turned on/off independently of each other and are allowed to have different ODRs and power modes.

The LSM6DSO has three operating modes available:

- Only accelerometer active and gyroscope in power-down
- Only gyroscope active and accelerometer in power-down
- Both accelerometer and gyroscope sensors active with independent ODR

The accelerometer is activated from power-down by writing ODR_XL[3:0] in CTRL1_XL (10h) while the gyroscope is activated from power-down by writing ODR_G[3:0] in CTRL2_G (11h). For combo mode, the ODRs are totally independent.

6.2 Accelerometer power modes

In the LSM6DSO, the accelerometer can be configured in five different operating modes: power-down, ultralow-power, low-power, normal mode, and high-performance mode. The operating mode selected depends on the value of the XL_HM_MODE bit in CTRL6_C (15h). If XL_HM_MODE is set to 0, high-performance mode is valid for all ODRs (from 12.5 Hz up to 6.66 kHz).

To enable the low-power and normal mode, the XL_HM_MODE bit has to be set to 1. Low-power mode is available for lower ODRs (1.6, 12.5, 26, 52 Hz) while normal mode is available for ODRs equal to 104 and 208 Hz.

6.2.1 Accelerometer ultra-low-power mode

The LSM6DSO can be configured in ultralow-power (ULP) mode by setting the XL_ULP_EN bit to 1 in CTRL5_C (14h) register. This mode can be used in accelerometer-only mode (gyroscope sensor must be configured in power-down mode) and for ODR_XL values between 1.6 Hz and 208 Hz.

When ULP mode is intended to be used, the bit XL_HM_MODE must be set to 0.

When ULP mode is switched ON/OFF, the accelerometer must be configured in power-down condition.

ULP mode cannot be used in mode 3 or mode 4 connection modes.

The embedded functions based on accelerometer data (free-fall, 6D/4D, tap, double tap, wake-up, activity/inactivity, stationary/motion, step counter, step detection, significant motion, tilt) and the FIFO batching functionality are still supported when ULP mode is enabled.

6.3 Gyroscope power modes

In the LSM6DSO, the gyroscope can be configured in four different operating modes: power-down, low-power, normal mode, and high-performance mode. The operating mode selected depends on the value of the G_HM_MODE bit in CTRL7_G (16h). If G_HM_MODE is set to 0, high-performance mode is valid for all ODRs (from 12.5 Hz up to 6.66 kHz).

To enable the low-power and normal mode, the G_HM_MODE bit has to be set to 1. Low-power mode is available for lower ODRs (12.5, 26, 52 Hz) while normal mode is available for ODRs equal to 104 and 208 Hz.

6.4 Block diagram of filters

Figure 15. **Block diagram of filters**

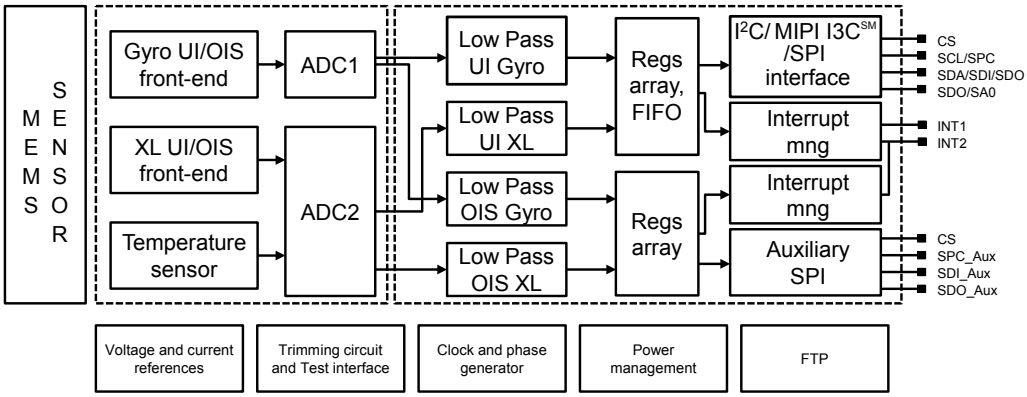

6.4.1 Block diagrams of the accelerometer filters

In the LSM6DSO, the filtering chain for the accelerometer part is composed of the following:

- Analog filter (anti-aliasing)
- Digital filter (LPF1)
- Composite filter

Details of the block diagram appear in the following figure.

Figure 16. **Accelerometer UI chain**

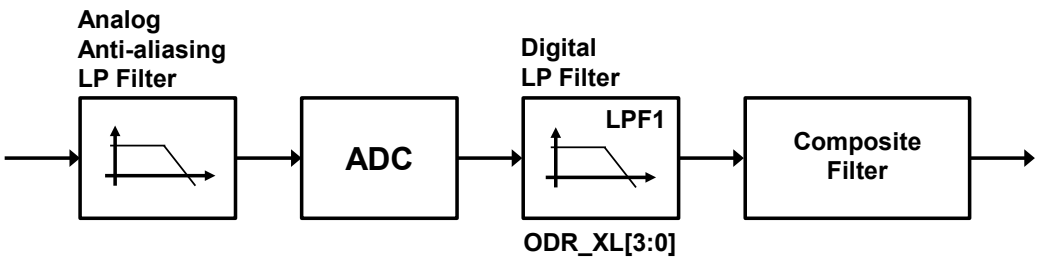

Figure 17. **Accelerometer composite filter**

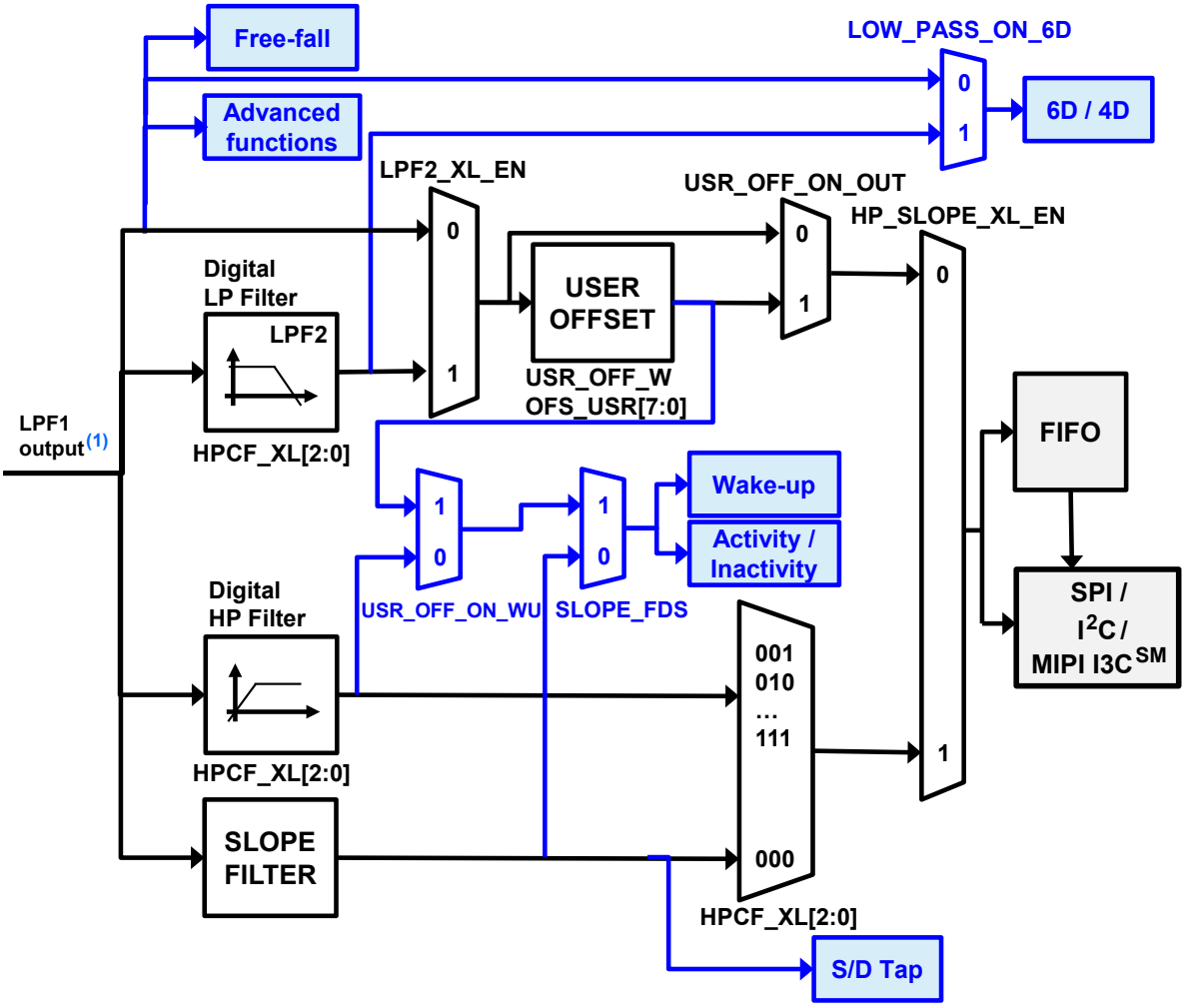

1. *The cutoff value of the LPF1 output is ODR/2 when the accelerometer is in high-performance mode. This value is equal to 700 Hz when the accelerometer is in low-power or normal mode.*

Note: *Advanced functions include pedometer, step detector and step counter, significant motion detection, and tilt functions.*

The accelerometer filtering chain when mode 4 is enabled is illustrated in the following figure.

Figure 18. **Accelerometer chain with mode 4 enabled**

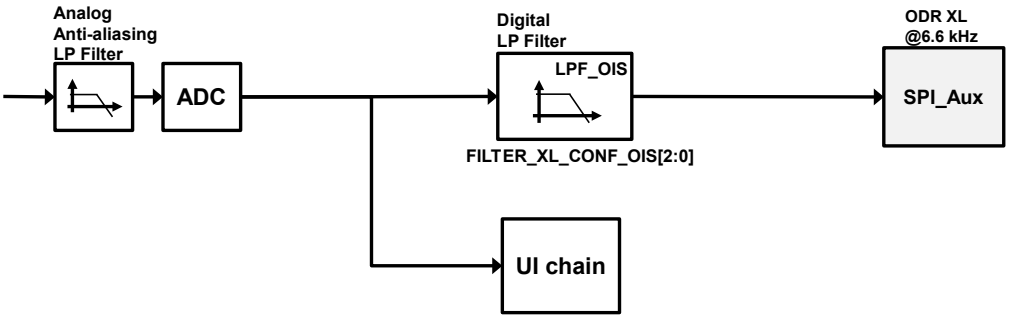

Note: *Mode 4 is enabled when Mode4_EN = 1 and OIS_EN_SPI2 = 1 in CTRL1_OIS (70h).*
The configuration of the accelerometer UI chain is not affected by enabling mode 4.
Accelerometer output values are in registers OUTX_L_A (28h) and OUTX_H_A (29h) through OUTZ_L_A (2Ch) and OUTZ_H_A (2Dh) and ODR at 6.66 kHz.
Accelerometer full-scale management between the UI chain and OIS chain depends on the setting of the XL_FS_MODE bit in register CTRL8_XL (17h).

6.4.2 Block diagrams of the gyroscope filters

In the LSM6DSO, the gyroscope filtering chain depends on the mode configuration:

- Mode 1 (for user interface (UI) and electronic image stabilization (EIS) functionality through the primary interface) and mode 2

Figure 19. Gyroscope digital chain - mode 1 (UI/EIS) and mode 2

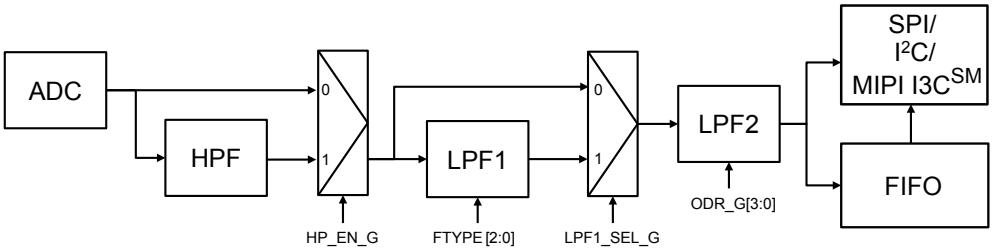

In this configuration, the gyroscope ODR is selectable from 12.5 Hz up to 6.66 kHz. A low-pass filter (LPF1) is available if the auxiliary SPI is disabled, for more details about the filter characteristics see Table 60. Gyroscope LPF1 bandwidth selection.
The digital LPF2 filter cannot be configured by the user and its cutoff frequency depends on the selected gyroscope ODR, as indicated in the following table.

Table 18. Gyroscope LPF2 bandwidth selection

Gyroscope ODR [Hz]	LPF2 cutoff [Hz]
12.5	4.2
26	8.3
52	16.6
104	33.0
208	66.8
417	135.9
833	295.5
1667	1108.1
3333	1320.7
6667	1441.8

Note: *Data can be acquired from the output registers and FIFO over the primary I²C/I³C/SPI interface.*

- Mode 3 / mode 4 (for OIS and EIS functionality)

- **Figure 20. Gyroscope digital chain - mode 3 / mode 4 (OIS/EIS)**

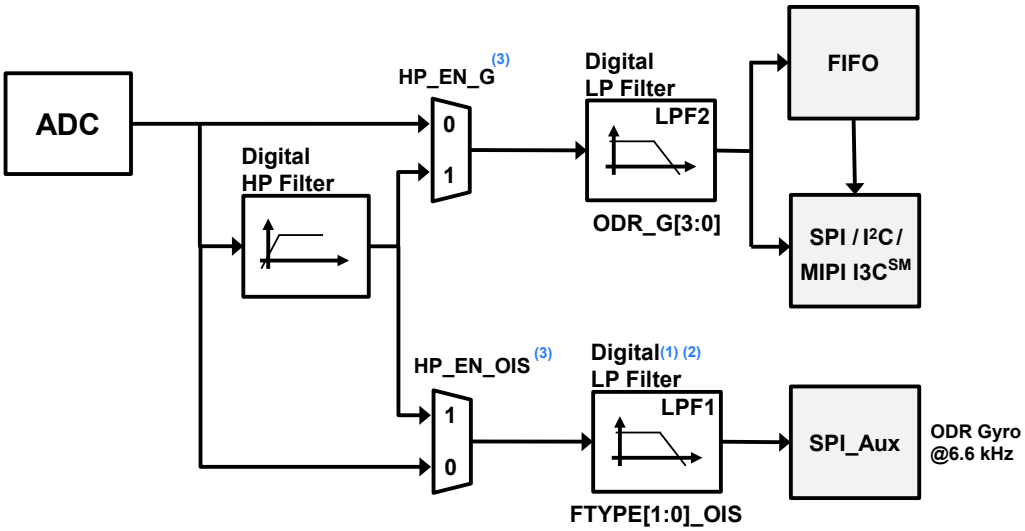

1. *When Mode3/4 is enabled, the LPF1 filter is not available in the gyroscope UI chain.*
2. *It is recommended to avoid using the LPF1 filter in mode1/2 when mode3/4 is used.*
3. *HP_EN_OIS can be used to select the HPF on the OIS path only if the HPF is not used in the UI chain. If both the HP_EN_G bit and HP_EN_OIS bit are set to 1, the HP filter is applied to the UI chain only.*

The auxiliary interface needs to be enabled in CTRL1_OIS (70h).

In mode 3/4 configuration, there are two paths:

- the chain for user interface (UI) where the ODR is selectable from 12.5 Hz up to 6.66 kHz
- the chain for OIS/EIS where the ODR is at 6.66 kHz and the LPF1 is available. The LPF1 configuration depends on the setting of the FTYPE_[1;0] _OIS bit in register CTRL2_OIS (71h); for more details about the filter characteristics see Table 151. Gyroscope OIS chain digital LPF1 filter bandwidth selection. Gyroscope output values are in registers 22h to 27h with the selected full scale (FS[1:0]_G_OIS bit in CTRL1_OIS (70h)).

6.5 FIFO

The presence of a FIFO allows consistent power saving for the system since the host processor does not need continuously poll data from the sensor, but it can wake up only when needed and burst the significant data out from the FIFO.

The LSM6DSO embeds 3 KB of data in FIFO (up to 9 KB with the compression feature enabled) to store the following data:

- Gyroscope
- Accelerometer
- External sensors (up to four)
- Step counter
- Timestamp
- Temperature

Writing data in the FIFO can be configured to be triggered by the:

- Accelerometer / gyroscope data-ready signal
- Sensor hub data-ready signal
- Step detection signal

The applications have maximum flexibility in choosing the rate of batching for physical sensors with FIFO-dedicated configurations: accelerometer, gyroscope, and temperature sensor batch rates can be selected by the user. External sensor writing in FIFO can be triggered by the accelerometer data-ready signal or by an external sensor interrupt. The step counter can be stored in FIFO with the associated timestamp each time a step is detected. It is possible to select decimation for timestamp batching in FIFO with a factor of 1, 8, or 32.

The reconstruction of a FIFO stream is a simple task thanks to the FIFO_DATA_OUT_TAG byte that allows recognizing the meaning of a word in FIFO.

FIFO allows correct reconstruction of the timestamp information for each sensor stored in FIFO. If a change in the ODR or BDR (batch data rate) configuration is performed, the application can correctly reconstruct the timestamp and know exactly when the change was applied without disabling FIFO batching. FIFO stores information of the new configuration and timestamp in which the change was applied in the device.

Finally, FIFO embeds a compression algorithm that the user can enable in order to have up to 9 KB of data stored in FIFO and take advantage of the interface communication length for FIFO flushing and communication power consumption.

The programmable FIFO watermark threshold can be set in FIFO_CTRL1 (07h) and FIFO_CTRL2 (08h) using the WTM[8:0] bits. To monitor the FIFO status, dedicated registers (FIFO_STATUS1 (3Ah), FIFO_STATUS2 (3Bh)) can be read to detect FIFO overrun events, FIFO full status, FIFO empty status, FIFO watermark status, and the number of unread samples stored in the FIFO. To generate dedicated interrupts on the INT1 and INT2 pins of these status events, the configuration can be set in INT1_CTRL (0Dh) and INT2_CTRL (0Eh).

The FIFO buffer can be configured according to six different modes:

- Bypass mode
- FIFO mode
- Continuous mode
- Continuous-to-FIFO mode
- Bypass-to-continuous mode
- Bypass-to-FIFO mode

Each mode is selected by the FIFO_MODE_[2:0] bits in the FIFO_CTRL4 (0Ah) register.

6.5.1 Bypass mode

In bypass mode (FIFO_CTRL4 (0Ah)(FIFO_MODE_[2:0] = 000), the FIFO is not operational and it remains empty. Bypass mode is also used to reset the FIFO when in FIFO mode.

6.5.2 FIFO mode

In FIFO mode (FIFO_CTRL4 (0Ah)(FIFO_MODE_[2:0] = 001) data from the output channels are stored in the FIFO until it is full.

To reset FIFO content, bypass mode should be selected by writing FIFO_CTRL4 (0Ah)(FIFO_MODE_[2:0]) to 000. After this reset command, it is possible to restart FIFO mode by writing FIFO_CTRL4 (0Ah) (FIFO_MODE_[2:0]) to 001.

The FIFO buffer memorizes up to 9 KB of data (with compression enabled) but the depth of the FIFO can be resized by setting the WTM[8:0] bits in FIFO_CTRL1 (07h) and FIFO_CTRL2 (08h). If the STOP_ON_WTM bit in FIFO_CTRL2 (08h) is set to 1, FIFO depth is limited up to the WTM[8:0] bits in FIFO_CTRL1 (07h) and FIFO_CTRL2 (08h).

6.5.3 Continuous mode

Continuous mode (FIFO_CTRL4 (0Ah)(FIFO_MODE_[2:0] = 110) provides a continuous FIFO update: as new data arrives, the older data is discarded.

A FIFO threshold flag FIFO_STATUS2 (3Bh)(FIFO_WTM_IA) is asserted when the number of unread samples in FIFO is greater than or equal to FIFO_CTRL1 (07h) and FIFO_CTRL2 (08h)(WTM[8:0]).

It is possible to route the FIFO_WTM_IA flag to the INT1 pin by writing in register INT1_CTRL (0Dh) (INT1_FIFO_TH) = 1 or to the INT2 pin by writing in register INT2_CTRL (0Eh)(INT2_FIFO_TH) = 1.

A full-flag interrupt can be enabled, INT1_CTRL (0Dh)(INT1_FIFO_FULL) = 1 or INT2_CTRL (0Eh) (INT2_FIFO_FULL) = 1, in order to indicate FIFO saturation and eventually read its content all at once.

If an overrun occurs, at least one of the oldest samples in FIFO has been overwritten, and the FIFO_OVR_IA flag in FIFO_STATUS2 (3Bh) is asserted.

In order to empty the FIFO before it is full, it is also possible to pull from FIFO the number of unread samples available in FIFO_STATUS1 (3Ah) and FIFO_STATUS2 (3Bh)(DIFF_FIFO_[9:0]).

6.5.4 Continuous-to-FIFO mode

In Continuous-to-FIFO mode (FIFO_CTRL4 (0Ah)(FIFO_MODE_[2:0] = 011), FIFO behavior changes according to the trigger event detected in one of the following interrupt events:

- Single tap
- Double tap
- Wake-up
- Free-fall
- D6D

When the selected trigger bit is equal to 1, FIFO operates in FIFO mode.

When the selected trigger bit is equal to 0, FIFO operates in continuous mode.

6.5.5 Bypass-to-continuous mode

In bypass-to-continuous mode (FIFO_CTRL4 (0Ah)(FIFO_MODE_[2:0] = 100), data measurement storage inside FIFO operates in continuous mode when selected triggers are equal to 1, otherwise FIFO content is reset (bypass mode).

FIFO behavior changes according to the trigger event detected in one of the following interrupt events:

- Single tap
- Double tap
- Wake-up
- Free-fall
- D6D

6.5.6 Bypass-to-FIFO mode

In bypass-to-FIFO mode (FIFO_CTRL4 (0Ah)(FIFO_MODE_[2:0] = 111), data measurement storage inside FIFO operates in FIFO mode when selected triggers are equal to 1, otherwise FIFO content is reset (bypass mode).

FIFO behavior changes according to the trigger event detected in one of the following interrupt events:

- Single tap
- Double tap
- Wake-up
- Free-fall
- D6D

6.5.7 FIFO reading procedure

The data stored in FIFO are accessible from dedicated registers and each FIFO word is composed of 7 bytes: one tag byte (FIFO_DATA_OUT_TAG (78h), in order to identify the sensor, and 6 bytes of fixed data (FIFO_DATA_OUT registers from (79h) to (7Eh)).

The DIFF_FIFO_[9:0] field in the FIFO_STATUS1 (3Ah) and FIFO_STATUS2 (3Bh) registers contains the number of words (1 byte TAG + 6 bytes DATA) collected in FIFO.

In addition, it is possible to configure a counter of the batch events of accelerometer or gyroscope sensors. The flag COUNTER_BDR_IA in FIFO_STATUS2 (3Bh) alerts that the counter reaches a selectable threshold (CNT_BDR_TH_[10:0] field in COUNTER_BDR_REG1 (0Bh) and COUNTER_BDR_REG2 (0Ch)). This allows triggering the reading of FIFO with the desired latency of one single sensor. The sensor is selectable using the TRIG_COUNTER_BDR bit in COUNTER_BDR_REG1 (0Bh). As for the other FIFO status events, the flag COUNTER_BDR_IA can be routed on the INT1 or INT2 pins by asserting the corresponding bits (INT1_CNT_BDR of INT1_CTRL (0Dh) and INT2_CNT_BDR of INT2_CTRL (0Eh)).

In order to maximize the amount of accelerometer and gyroscope data in FIFO, the user can enable the compression algorithm by setting to 1 both the FIFO_COMPR_EN bit in EMB_FUNC_EN_B (05h) (embedded functions registers bank) and the FIFO_COMPR_RT_EN bit in FIFO_CTRL2 (08h). When compression is enabled, it is also possible to force writing noncompressed data at a selectable rate using the UNCOPTR_RATE_[1:0] field in FIFO_CTRL2 (08h).

Meta information about accelerometer and gyroscope sensor configuration changes can be managed by enabling the ODR_CHG_EN bit in FIFO_CTRL2 (08h).

7 Application hints

7.1 LSM6DSO electrical connections in mode 1

Figure 21. LSM6DSO electrical connections in mode 1

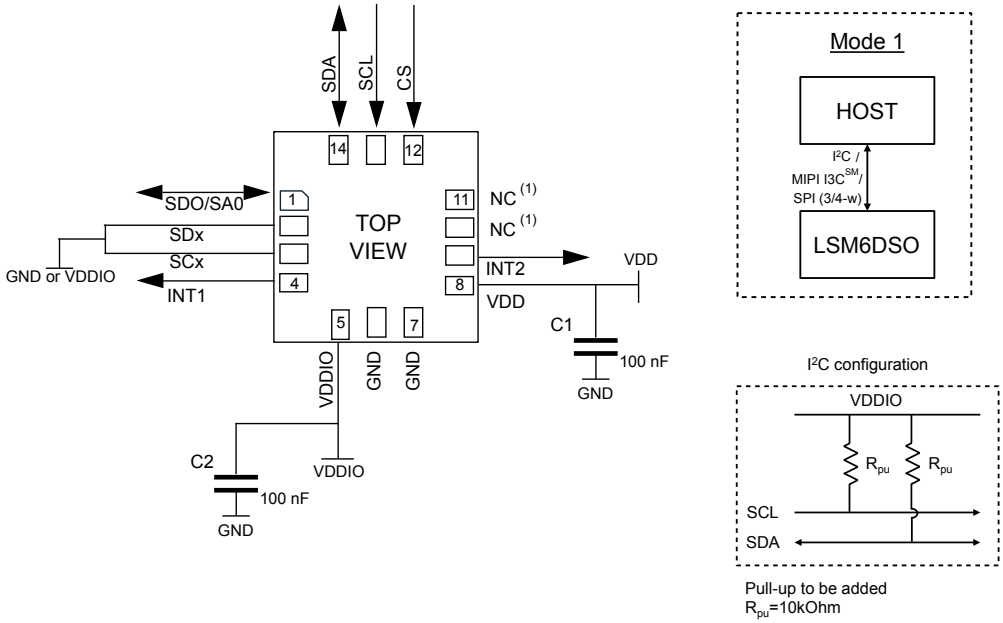

1. *Leave pin electrically unconnected and soldered to PCB.*

The device core is supplied through the VDD line. Power supply decoupling capacitors (C1, C2 = 100 nF ceramic) should be placed as near as possible to the supply pin of the device (common design practice).

The functionality of the device and the measured acceleration/angular rate data is selectable and accessible through the SPI/I²C/MIPI I3C^{SM} interface.

The functions, the threshold, and the timing of the two interrupt pins for each sensor can be completely programmed by the user through the SPI/I²C/MIPI I3C^{SM} interface.

7.2 LSM6DSO electrical connections in mode 2

Figure 22. LSM6DSO electrical connections in mode 2

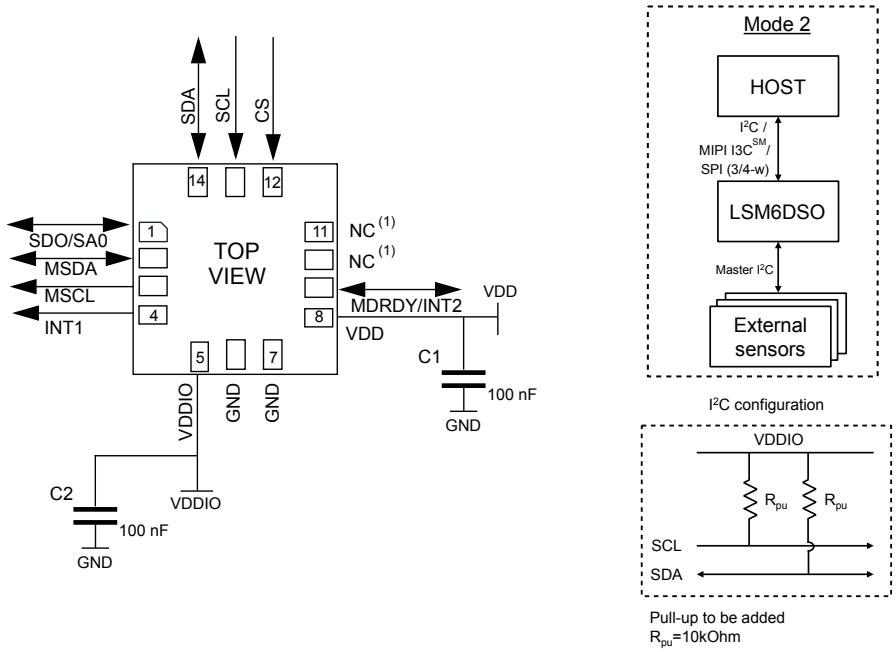

1. Leave pin electrically unconnected and soldered to PCB.

The device core is supplied through the VDD line. Power supply decoupling capacitors (C1, C2 = 100 nF ceramic) should be placed as near as possible to the supply pin of the device (common design practice).

The functionality of the device and the measured acceleration/angular rate data is selectable and accessible through the SPI/I²C/MIPI I3C^{SM} primary interface.

The functions, the threshold, and the timing of the two interrupt pins for each sensor can be completely programmed by the user through the SPI/I²C/MIPI I3C^{SM} primary interface.

7.3 LSM6DSO electrical connections in mode 3 and mode 4

Figure 23. LSM6DSO electrical connections in mode 3 and mode 4 (auxiliary 3/4-wire SPI)

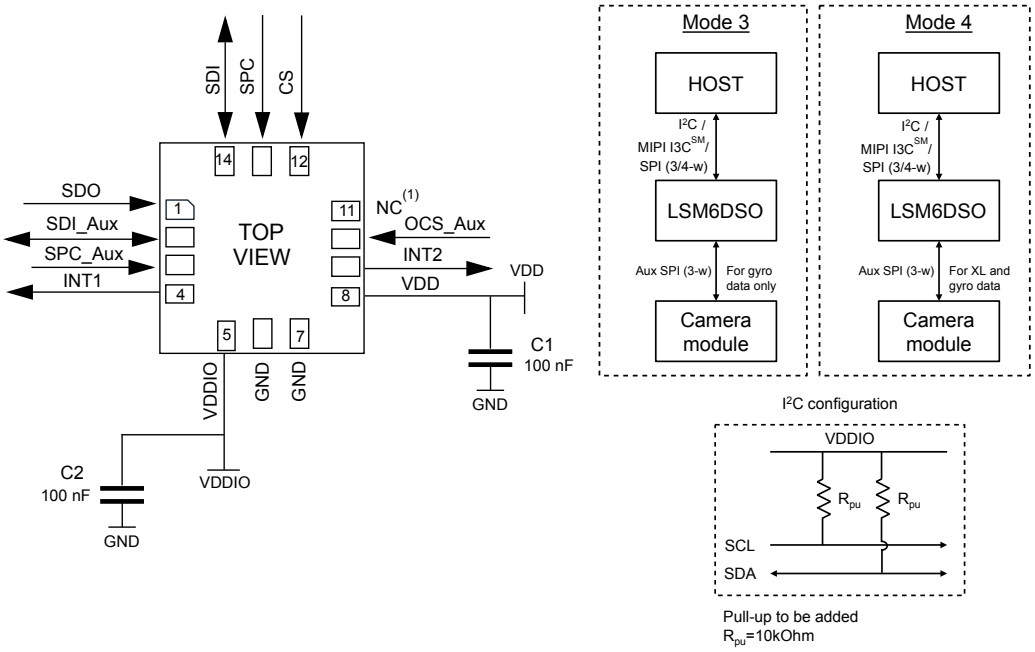

1. *Leave pin electrically unconnected and soldered to PCB.*

Note: *When mode 3 or mode 4 is used, the pull-up on pins 10 and 11 can be enabled or disabled (refer to Table 19. Internal pin status). To avoid leakage current, it is not recommended to leave the SPI lines floating (or when the OIS system is off).*

The device core is supplied through the VDD line. Power supply decoupling capacitors (C1, C2 = 100 nF ceramic) should be placed as near as possible to the supply pin of the device (common design practice).

The functionality of the device is selectable and accessible through the SPI/I²C/MIPI I3C^{SM} primary interface.

Measured acceleration/angular rate data is selectable and accessible through the SPI/I²C/MIPI I3C^{SM} primary interface and auxiliary SPI.

The functions, the threshold, and the timing of the two interrupt pins for each sensor can be completely programmed by the user through the SPI/I²C/MIPI I3C^{SM} interface.

Table 19. Internal pin status

Pin #	Name	Mode 1 function	Mode 2 function	Mode 3 / mode 4 function	Pin status mode 1	Pin status mode 2	Pin status mode 3/4[1]
1	SDO	SPI 4-wire interface serial data output (SDO)	SPI 4-wire interface serial data output (SDO)	SPI 4-wire interface serial data output (SDO)	Default: input without pull-up Pull-up is enabled if bit SDO_PU_EN = 1 in register PIN_CTRL (02h).	Default: input without pull-up Pull-up is enabled if bit SDO_PU_EN = 1 in register PIN_CTRL (02h).	Default: input without pull-up Pull-up is enabled if bit SDO_PU_EN = 1 in register PIN_CTRL (02h).
	SA0	I²C least significant bit of the device address (SA0) MIPI I3C^{SM} least significant bit of the static address (SA0)	I²C least significant bit of the device address (SA0) MIPI I3C^{SM} least significant bit of the static address (SA0)	I²C least significant bit of the device address (SA0) MIPI I3C^{SM} least significant bit of the static address (SA0)			
2	SDx	Connect to VDDIO or GND	I²C master serial data (MSDA)	Auxiliary SPI 3/4-wire interface serial data input (SDI_Aux) and SPI 3-wire serial data output (SDO_Aux)	Default: input without pull-up Pull-up is enabled if bit SHUB_PU_EN = 1 in register MASTER_CONFIG (14h) in the sensor hub registers (see Note to enable pull-up).	Default: input without pull-up Pull-up is enabled if bit SHUB_PU_EN = 1 in register MASTER_CONFIG (14h) in the sensor hub registers (see Note to enable pull-up).	Default: input without pull-up Pull-up is enabled if bit SHUB_PU_EN = 1 in register MASTER_CONFIG (14h) in the sensor hub registers (see Note to enable pull-up).
3	SCx	Connect to VDDIO or GND	I²C master serial clock (MSCL)	Auxiliary SPI 3/4-wire interface serial port clock (SPC_Aux)	Default: input without pull-up Pull-up is enabled if bit SHUB_PU_EN = 1 in register MASTER_CONFIG (14h) in the sensor hub registers (see Note to enable pull-up).	Default: input without pull-up Pull-up is enabled if bit SHUB_PU_EN = 1 in register MASTER_CONFIG (14h) in the sensor hub registers (see Note to enable pull-up).	Default: input without pull-up Pull-up is enabled if bit SHUB_PU_EN = 1 in register MASTER_CONFIG (14h) in the sensor hub registers (see Note to enable pull-up)
4	INT1	Programmable interrupt 1 / If device is used as MIPI I3C^{SM} pure slave, this pin must be set to 1.	Programmable interrupt 1 / If device is used as MIPI I3C^{SM} pure slave, this pin must be set to 1.	Programmable interrupt 1 / If device is used as MIPI I3C^{SM} pure slave, this pin must be set to 1.	Default: input with pull-down[2]	Default: input with pull-down[2]	Default: input with pull-down[2]
5	VDDIO	Power supply for I/O pins	Power supply for I/O pins	Power supply for I/O pins			
6	GND	0 V supply	0 V supply	0 V supply			
7	GND	0 V supply	0 V supply	0 V supply			
8	VDD	Power supply	Power supply	Power supply			
9	INT2	Programmable interrupt 2 (INT2) / Data enabled (DEN)	Programmable interrupt 2 (INT2) / Data enabled (DEN) / I²C master external synchronization signal (MDRDY)	Programmable interrupt 2 (INT2) / Data enabled (DEN)	Default: output forced to ground	Default: output forced to ground	Default: output forced to ground
10	OCS_Aux	Leave unconnected	Leave unconnected	Auxiliary SPI 3/4-wire interface enabled	Default: input with pull-up Pull-up is disabled if bit OIS_PU_DIS = 1 in register PIN_CTRL (02h).	Default: input with pull-up Pull-up is disabled if bit OIS_PU_DIS = 1 in register PIN_CTRL (02h).	Default: input without pull-up (regardless of the value of bit OIS_PU_DIS in register PIN_CTRL (02h).)
11	SDO_Aux	Connect to VDDIO or leave unconnected	Connect to VDDIO or leave unconnected	Auxiliary SPI 3-wire interface: leave unconnected / Auxiliary SPI 4-wire interface: serial data output (SDO_Aux)	Default: input with pull-up Pull-up is disabled if bit OIS_PU_DIS = 1 in register PIN_CTRL (02h).	Default: input with pull-up Pull-up is disabled if bit OIS_PU_DIS = 1 in register PIN_CTRL (02h).	Default: input without pull-up Pull-up is enabled if bit SIM_OIS = 1 (Aux_SPI 3-wire) in register CTRL1_OIS (70h) and bit OIS_PU_DIS = 0 in register PIN_CTRL (02h).
12	CS	I²C/SPI mode selection (1:SPI idle mode / I²C communication enabled;	I²C/SPI mode selection (1:SPI idle mode / I²C communication enabled;	I²C/SPI mode selection (1:SPI idle mode / I²C communication enabled;	Default: input with pull-up	Default: input with pull-up	Default: input with pull-up

Pin #	Name	Mode 1 function	Mode 2 function	Mode 3 / mode 4 function	Pin status mode 1	Pin status mode 2	Pin status mode 3/4[1]
		0: SPI communication mode / I²C disabled)	0: SPI communication mode / I²C disabled)	0: SPI communication mode / I²C disabled)	Pull-up is disabled if bit I2C_disable = 1 in register CTRL4_C (13h) and I3C_disable = 1 in register CTRL9_XL (18h).	Pull-up is disabled if bit I2C_disable = 1 in register CTRL4_C (13h) and I3C_disable = 1 in register CTRL9_XL (18h).	Pull-up is disabled if bit I2C_disable = 1 in register CTRL4_C (13h) and I3C_disable = 1 in register CTRL9_XL (18h).
13	SCL	I²C/MIPI I3C^{SM} serial clock (SCL) / SPI serial port clock (SPC)	I²C/MIPI I3C^{SM} serial clock (SCL) / SPI serial port clock (SPC)	I²C/MIPI I3C^{SM} serial clock (SCL) / SPI serial port clock (SPC)	Default: input without pull-up	Default: input without pull-up	Default: input without pull-up
14	SDA	I²C/MIPI I3C^{SM} serial data (SDA) / SPI serial data input (SDI) / 3-wire interface serial data output (SDO)	I²C/MIPI I3C^{SM} serial data (SDA) / SPI serial data input (SDI) / 3-wire interface serial data output (SDO)	I²C/MIPI I3C^{SM} serial data (SDA) / SPI serial data input (SDI) / 3-wire interface serial data output (SDO)	Default: input without pull-up	Default: input without pull-up	Default: input without pull-up

1. *Mode 3 is enabled when the OIS_EN_SPI2 bit in the CTRL1_OIS (70h) register is set to 1. Mode 4 is enabled when both the OIS_EN_SPI2 bit and the Mode4_EN bit in the CTRL1_OIS (70h) register are set to 1.*
2. *INT1 must be set to 0 or left unconnected during power-on if the I²C/SPI interfaces are used.*

Internal pull-up value is from 30 kΩ to 50 kΩ, depending on VDDIO.

Note: The procedure to enable the pull-up on pins 2 and 3 is as follows:

1. From the primary I²C/I³C/SPI interface: write 40h in register at address 01h (enable access to the sensor hub registers)

2. From the primary I²C/I³C/SPI interface: write 08h in register at address 14h (enable the pull-up on pins 2 and 3)

3. From the primary I²C/I³C/SPI interface: write 00h in register at address 01h (disable access to the sensor hub registers)

8 Register map

The table given below provides a list of the 8/16-bit registers embedded in the device and the corresponding addresses.

Table 20. Registers address map

Name	Type	Register address		Default	Comment
		Hex	Binary		
FUNC_CFG_ACCESS	R/W	01	00000001	00000000	
PIN_CTRL	R/W	02	00000010	00111111	
RESERVED	-	03-06			
FIFO_CTRL1	R/W	07	00000111	00000000	
FIFO_CTRL2	R/W	08	00001000	00000000	
FIFO_CTRL3	R/W	09	00001001	00000000	
FIFO_CTRL4	R/W	0A	00001010	00000000	
COUNTER_BDR_REG1	R/W	0B	00001011	00000000	
COUNTER_BDR_REG2	R/W	0C	00001100	00000000	
INT1_CTRL	R/W	0D	00001101	00000000	
INT2_CTRL	R/W	0E	00001110	00000000	
WHO_AM_I	R	0F	00001111	01101100	R (SPI2)
CTRL1_XL	R/W	10	00010000	00000000	R (SPI2)
CTRL2_G	R/W	11	00010001	00000000	R (SPI2)
CTRL3_C	R/W	12	00010010	00000100	R (SPI2)
CTRL4_C	R/W	13	00010011	00000000	R (SPI2)
CTRL5_C	R/W	14	00010100	00000000	R (SPI2)
CTRL6_C	R/W	15	00010101	00000000	R (SPI2)
CTRL7_G	R/W	16	00010110	00000000	R (SPI2)
CTRL8_XL	R/W	17	0001 0111	00000000	R (SPI2)
CTRL9_XL	R/W	18	00011000	11100000	R (SPI2)
CTRL10_C	R/W	19	00011001	00000000	R (SPI2)
ALL_INT_SRC	R	1A	00011010	output	
WAKE_UP_SRC	R	1B	00011011	output	
TAP_SRC	R	1C	00011100	output	
D6D_SRC	R	1D	00011101	output	
STATUS_REG(1) / STATUS_SPIAux(2)	R	1E	00011110	output	
RESERVED	-	1F	00011111		
OUT_TEMP_L	R	20	00100000	output	
OUT_TEMP_H	R	21	00100001	output	
OUTX_L_G	R	22	00100010	output	
OUTX_H_G	R	23	00100011	output	
OUTY_L_G	R	24	00100100	output	
OUTY_H_G	R	25	00100101	output	
OUTZ_L_G	R	26	00100110	output	

Name	Type	Register address		Default	Comment
		Hex	Binary		
OUTZ_H_G	R	27	00100111	output	
OUTX_L_A	R	28	00101000	output	
OUTX_H_A	R	29	00101001	output	
OUTY_L_A	R	2A	00101010	output	
OUTY_H_A	R	2B	00101011	output	
OUTZ_L_A	R	2C	00101100	output	
OUTZ_H_A	R	2D	00101101	output	
RESERVED	-	2E-34			
EMB_FUNC_STATUS_MAINPAGE	R	35	00110101	output	
FSM_STATUS_A_MAINPAGE	R	36	00110110	output	
FSM_STATUS_B_MAINPAGE	R	37	00110111	output	
RESERVED	-	38			
STATUS_MASTER_MAINPAGE	R	39	00111001	output	
FIFO_STATUS1	R	3A	00111010	output	
FIFO_STATUS2	R	3B	00111011	output	
RESERVED	-	3C-3F			
TIMESTAMP0	R	40	01000000	output	R (SPI2)
TIMESTAMP1	R	41	01000001	output	R (SPI2)
TIMESTAMP2	R	42	01000010	output	R (SPI2)
TIMESTAMP3	R	43	01000011	output	R (SPI2)
RESERVED	-	44-55			
TAP_CFG0	R/W	56	01010110	00000000	
TAP_CFG1	R/W	57	01010111	00000000	
TAP_CFG2	R/W	58	01011000	00000000	
TAP_THS_6D	R/W	59	01011001	00000000	
INT_DUR2	R/W	5A	01011010	00000000	
WAKE_UP_THS	R/W	5B	01011011	00000000	
WAKE_UP_DUR	R/W	5C	01011100	00000000	
FREE_FALL	R/W	5D	01011101	00000000	
MD1_CFG	R/W	5E	01011110	00000000	
MD2_CFG	R/W	5F	01011111	00000000	
RESERVED	-	60-61			
I3C_BUS_AVB	R/W	62	01100010	00000000	
INTERNAL_FREQ_FINE	R	63	01100011	output	
RESERVED	-	64-6E			
INT_OIS	R	6F	01101111	00000000	R/W (SPI2)
CTRL1_OIS	R	70	01110000	00000000	R/W (SPI2)
CTRL2_OIS	R	71	01110001	00000000	R/W (SPI2)
CTRL3_OIS	R	72	01110010	00000000	R/W (SPI2)
X_OFS_USR	R/W	73	01110011	00000000	

Name	Type	Register address		Default	Comment
		Hex	Binary		
Y_OFS_USR	R/W	74	01110100	00000000	
Z_OFS_USR	R/W	75	01110101	00000000	
RESERVED	-	76-77			
FIFO_DATA_OUT_TAG	R	78	01111000	output	
FIFO_DATA_OUT_X_L	R	79	01111001	output	
FIFO_DATA_OUT_X_H	R	7A	01111010	output	
FIFO_DATA_OUT_Y_L	R	7B	01111011	output	
FIFO_DATA_OUT_Y_H	R	7C	01111100	output	
FIFO_DATA_OUT_Z_L	R	7D	01111101	output	
FIFO_DATA_OUT_Z_H	R	7E	01111110	output	

1. *This register status is read using the primary interface for user interface data.*
2. *This register status is read using the auxiliary SPI for OIS data.*

9 Register description

The device contains a set of registers which are used to control its behavior and to retrieve linear acceleration, angular rate and temperature data. The register addresses, made up of 7 bits, are used to identify them and to write the data through the serial interface.

9.1 FUNC_CFG_ACCESS (01h)

Enable embedded functions register (R/W)

Table 21. FUNC_CFG_ACCESS register

FUNC_CFG_ ACCESS	SHUB_REG ACCESS	0[1]	0[1]	0[1]	0[1]	0[1]	0[1]

1. *This bit must be set to 0 for the correct operation of the device.*

Table 22. FUNC_CFG_ACCESS register description

FUNC_CFG_ACCESS	Enables access to the embedded functions configuration registers[1] Default value: 0
SHUB_REG_ACCESS	Enables access to the sensor hub (I²C master) registers[2] Default value: 0

1. *Details concerning the embedded functions configuration registers are available in Section 10: Embedded functions register mapping and Section 11: Embedded functions register description.*
2. *Details concerning the sensor hub registers are available in Section 14: Sensor hub register mapping and Section 15: Sensor hub register description.*

9.2 PIN_CTRL (02h)

Enable/disable pull-up of SDO, OCS_AUX, SDO_AUX pins register (R/W)

Table 23. PIN_CTRL register

OIS_ PU_DIS	SDO_ PU_EN	1[1]	1[1]	1[1]	1[1]	1[1]	1[1]

1. *This bit must be set to 1 for the correct operation of the device.*

Table 24. PIN_CTRL register description

OIS_PU_DIS	Disables pull-up on both OCS_Aux and SDO_Aux pins (for mode 1 and mode 2). For further details about the configuration of the pull-up resistors in mode 3 and mode 4, refer to Table 19. Default value: 0 (0: OCS_Aux and SDO_Aux pins with pull-up; 1: OCS_Aux and SDO_Aux pins pull-up disconnected)
SDO_PU_EN	Enables pull-up on SDO pin (0: SDO pin pull-up disconnected (default); 1: SDO pin with pull-up)

9.3 FIFO_CTRL1 (07h)

FIFO control register 1 (R/W)

Table 25. FIFO_CTRL1 register

WTM7	WTM6	WTM5	WTM4	WTM3	WTM2	WTM1	WTM0

Table 26. FIFO_CTRL1 register description

WTM[7:0]	FIFO watermark threshold, in conjunction with WTM8 in FIFO_CTRL2 (08h) 1 LSB = 1 sensor (6 bytes) + TAG (1 byte) written in FIFO Watermark flag rises when the number of bytes written in the FIFO is greater than or equal to the threshold level.

9.4 FIFO_CTRL2 (08h)

FIFO control register 2 (R/W)

Table 27. FIFO_CTRL2 register

STOP_ON _WTM	FIFO_COMPR _RT_EN	0[1]	ODRCHG _EN	0[1]	UNCOPTR_ RATE_1	UNCOPTR_ RATE_0	WTM8

1. *This bit must be set to 0 for the correct operation of the device.*

Table 28. FIFO_CTRL2 register description

STOP_ON_WTM	Sensing chain FIFO stop values memorization at threshold level (0: FIFO depth is not limited (default); 1: FIFO depth is limited to threshold level, defined in FIFO_CTRL1 (07h) and FIFO_CTRL2 (08h))
FIFO_COMPR_RT_EN[1]	Enables/disables compression algorithm runtime
ODRCHG_EN	Enables ODR CHANGE virtual sensor to be batched in FIFO
UNCOPTR_RATE_[1:0]	This field configures the compression algorithm to write noncompressed data at each rate. (0: noncompressed data writing is not forced; 1: noncompressed data every 8 batch data rate; 2: noncompressed data every 16 batch data rate; 3: noncompressed data every 32 batch data rate)
WTM8	FIFO watermark threshold, in conjunction with WTM_FIFO[7:0] in FIFO_CTRL1 (07h) 1 LSB = 1 sensor (6 bytes) + TAG (1 byte) written in FIFO Watermark flag rises when the number of bytes written in the FIFO is greater than or equal to the threshold level.

1. *This bit is active if the FIFO_COMPR_EN bit of EMB_FUNC_EN_B (05h) is set to 1.*

9.5 FIFO_CTRL3 (09h)

FIFO control register 3 (R/W)

Table 29. FIFO_CTRL3 register

BDR_GY_3	BDR_GY_2	BDR_GY_1	BDR_GY_0	BDR_XL_3	BDR_XL_2	BDR_XL_1	BDR_XL_0

Table 30. FIFO_CTRL3 register description

BDR_GY_[3:0]	Selects batch data rate (write frequency in FIFO) for gyroscope data. (0000: gyroscope not batched in FIFO (default); 0001: 12.5 Hz; 0010: 26 Hz; 0011: 52 Hz; 0100: 104 Hz; 0101: 208 Hz; 0110: 417 Hz; 0111: 833 Hz; 1000: 1667 Hz; 1001: 3333 Hz; 1010: 6667 Hz; 1011: 6.5 Hz; 1100-1111: not allowed)
BDR_XL_[3:0]	Selects batch data rate (write frequency in FIFO) for accelerometer data. (0000: accelerometer not batched in FIFO (default); 0001: 12.5 Hz; 0010: 26 Hz; 0011: 52 Hz; 0100: 104 Hz; 0101: 208 Hz; 0110: 417 Hz; 0111: 833 Hz; 1000: 1667 Hz; 1001: 3333 Hz; 1010: 6667 Hz; 1011: 1.6 Hz; 1100-1111: not allowed)

9.6 FIFO_CTRL4 (0Ah)

FIFO control register 4 (R/W)

Table 31. FIFO_CTRL4 register

DEC_TS_ BATCH_1	DEC_TS_ BATCH_0	ODR_T_ BATCH_1	ODR_T_ BATCH_0	0[1]	FIFO_ MODE2	FIFO_ MODE1	FIFO_ MODE0

1. *This bit must be set to 0 for the correct operation of the device.*

Table 32. FIFO_CTRL4 register description

DEC_TS_BATCH_[1:0]	Selects decimation for timestamp batching in FIFO. The write rate is the maximum rate between the accelerometer and gyroscope BDR divided by the decimation decoder. (00: timestamp not batched in FIFO (default); 01: decimation 1: max(BDR_XL[Hz],BDR_GY[Hz]) [Hz]; 10: decimation 8: max(BDR_XL[Hz],BDR_GY[Hz])/8 [Hz]; 11: decimation 32: max(BDR_XL[Hz],BDR_GY[Hz])/32 [Hz])
ODR_T_BATCH_[1:0]	Selects batch data rate (write frequency in FIFO) for temperature data (00: temperature not batched in FIFO (default); 01: 1.6 Hz; 10: 12.5 Hz; 11: 52 Hz)
FIFO_MODE[2:0]	FIFO mode selection (000: bypass mode: FIFO disabled; 001: FIFO mode: stops collecting data when FIFO is full; 010: reserved; 011: continuous-to-FIFO mode: continuous mode until the trigger is deasserted, then FIFO mode; 100: bypass-to-continuous mode: bypass mode until the trigger is deasserted, then continuous mode; 101: reserved; 110: continuous mode: if the FIFO is full, the new sample overwrites the older one; 111: bypass-to-FIFO mode: bypass mode until the trigger is deasserted, then FIFO mode.)

9.7 COUNTER_BDR_REG1 (0Bh)

Counter batch data rate register 1 (R/W)

Table 33. COUNTER_BDR_REG1 register

dataready_ pulsed	RST_ COUNTER_BDR	TRIG_ COUNTER_BDR	0[1]	0[1]	CNT_BDR_ TH_10	CNT_BDR_ TH_9	CNT_BDR_ TH_8

1. *This bit must be set to 0 for the correct operation of the device.*

Table 34. COUNTER_BDR_REG1 register description

dataready_pulsed	Enables pulsed data-ready mode (0: data-ready latched mode (returns to 0 only after an interface reading) (default); 1: data-ready pulsed mode (the data ready pulses are 75 µs long)
RST_COUNTER_BDR	Resets the internal counter of batch events for a single sensor This bit is automatically reset to zero if it was set to 1.
TRIG_COUNTER_BDR	Selects the trigger for the internal counter of batch events between the accelerometer and gyroscope. (0: accelerometer batch event; 1: gyroscope batch event)
CNT_BDR_TH_[10:8]	In conjunction with CNT_BDR_TH_[7:0] in COUNTER_BDR_REG2 (0Ch), sets the threshold for the internal counter of batch events. When this counter reaches the threshold, the counter is reset and the COUNTER_BDR_IA flag in FIFO_STATUS2 (3Bh) is set to 1.

9.8 COUNTER_BDR_REG2 (0Ch)

Counter batch data rate register 2 (R/W)

Table 35. COUNTER_BDR_REG2 register

CNT_BDR_ TH_7	CNT_BDR_ TH_6	CNT_BDR_ TH_5	CNT_BDR_ TH_4	CNT_BDR_ TH_3	CNT_BDR_ TH_2	CNT_BDR_ TH_1	CNT_BDR_ TH_0

Table 36. COUNTER_BDR_REG2 register description

CNT_BDR_TH_[7:0]	In conjunction with CNT_BDR_TH_[10:8] in COUNTER_BDR_REG1 (0Bh), sets the threshold for the internal counter of batch events. When this counter reaches the threshold, the counter is reset and the COUNTER_BDR_IA flag in FIFO_STATUS2 (3Bh) is set to 1.

9.9 INT1_CTRL (0Dh)

INT1 pin control register (R/W)

Each bit in this register enables a signal to be carried over INT1 when the MIPI I3C^{SM} dynamic address is not assigned (I²C or SPI is used). Some bits can be also used to trigger an IBI (in-band interrupt) when the MIPI I3C^{SM} interface is used. The output of the pin is the OR combination of the signals selected here and in MD1_CFG (5Eh).

Table 37. INT1_CTRL register

DEN_DRDY _flag	INT1_ CNT_BDR	INT1_ FIFO_FULL	INT1_ FIFO_OVR	INT1_ FIFO_TH	INT1_ BOOT	INT1_ DRDY_G	INT1_ DRDY_XL

Table 38. INT1_CTRL register description

DEN_DRDY_flag	Sends DEN_DRDY (DEN stamped on the sensor data flag) to the INT1 pin
INT1_CNT_BDR	Enables COUNTER_BDR_IA interrupt on INT1
INT1_FIFO_FULL	Enables FIFO full flag interrupt on the INT1 pin. It can be also used to trigger an IBI when the MIPI I3C^{SM} interface is used.
INT1_FIFO_OVR	Enables FIFO overrun interrupt on the INT1 pin. It can be also used to trigger an IBI when the MIPI I3C^{SM} interface is used.
INT1_FIFO_TH	Enables FIFO threshold interrupt on the INT1 pin. It can be also used to trigger an IBI when the MIPI I3C^{SM} interface is used.
INT1_BOOT	Enables boot status on the INT1 pin
INT1_DRDY_G	Enables gyroscope data-ready interrupt on the INT1 pin. It can be also used to trigger an IBI when the MIPI I3C^{SM} interface is used.
INT1_DRDY_XL	Enables accelerometer data-ready interrupt on the INT1 pin. It can be also used to trigger an IBI when the MIPI I3C^{SM} interface is used.

9.10 INT2_CTRL (0Eh)

INT2 pin control register (R/W)

Each bit in this register enables a signal to be carried over INT2 when the MIPI I3C^{SM} dynamic address is not assigned (I²C or SPI is used). Some bits can be also used to trigger an IBI when the MIPI I3C^{SM} interface is used. The output of the pin is the OR combination of the signals selected here and in MD2_CFG (5Fh).

Table 39. INT2_CTRL register

0[1]	INT2_ CNT_BDR	INT2_ FIFO_FULL	INT2_ FIFO_OVR	INT2_ FIFO_TH	INT2_ DRDY_TEMP	INT2_ DRDY_G	INT2_ DRDY_XL

1. *This bit must be set to 0 for the correct operation of the device.*

Table 40. INT2_CTRL register description

INT2_CNT_BDR	Enables COUNTER_BDR_IA interrupt on INT2
INT2_FIFO_FULL	Enables FIFO full flag interrupt on the INT2 pin
INT2_FIFO_OVR	Enables FIFO overrun interrupt on the INT2 pin
INT2_FIFO_TH	Enables FIFO threshold interrupt on the INT2 pin
INT2_DRDY_TEMP	Enables temperature sensor data-ready interrupt on the INT2 pin. It can be also used to trigger an IBI when the MIPI I3C^{SM} interface is used and INT2_ON_INT1 = 1 in CTRL4_C (13h).
INT2_DRDY_G	Gyroscope data-ready interrupt on the INT2 pin
INT2_DRDY_XL	Accelerometer data-ready interrupt on the INT2 pin

9.11 WHO_AM_I (0Fh)

WHO_AM_I register (R). This is a read-only register. Its value is fixed at 6Ch.

Table 41. WhoAmI register

0	1	1	0	1	1	0	0

9.12 CTRL1_XL (10h)

Accelerometer control register 1 (R/W)

Table 42. CTRL1_XL register

ODR_XL3	ODR_XL2	ODR_XL1	ODR_XL0	FS1_XL	FS0_XL	LPF2_XL_EN	0[1]

1. *This bit must be set to 0 for the correct operation of the device.*

Table 43. CTRL1_XL register description

ODR_XL[3:0]	Accelerometer ODR selection (see Table 44)
FS[1:0]_XL	Accelerometer full-scale selection (see Table 45)
LPF2_XL_EN	Accelerometer high-resolution selection (0: output from first stage digital filtering selected (default); 1: output from LPF2 second filtering stage selected)

Table 44. Accelerometer ODR register setting

ODR_XL3	ODR_XL2	ODR_XL1	ODR_XL0	ODR selection [Hz] when XL_HM_MODE = 1 in CTRL6_C (15h)	ODR selection [Hz] when XL_HM_MODE = 0 in CTRL6_C (15h)
0	0	0	0	Power-down	Power-down
1	0	1	1	1.6 Hz (low power only)	12.5 Hz (high performance)
0	0	0	1	12.5 Hz (low power)	12.5 Hz (high performance)
0	0	1	0	26 Hz (low power)	26 Hz (high performance)
0	0	1	1	52 Hz (low power)	52 Hz (high performance)
0	1	0	0	104 Hz (normal mode)	104 Hz (high performance)
0	1	0	1	208 Hz (normal mode)	208 Hz (high performance)
0	1	1	0	416 Hz (high performance)	416 Hz (high performance)
0	1	1	1	833 Hz (high performance)	833 Hz (high performance)
1	0	0	0	1.66 kHz (high performance)	1.66 kHz (high performance)
1	0	0	1	3.33 kHz (high performance)	3.33 kHz (high performance)
1	0	1	0	6.66 kHz (high performance)	6.66 kHz (high performance)
1	1	x	x	Not allowed	Not allowed

Table 45. Accelerometer full-scale selection

FS[1:0]_XL	XL_FS_MODE = 0 in CTRL8_XL (17h)	XL_FS_MODE = 1 in CTRL8_XL (17h)
00 (default)	±2 *g*	±2 *g*
01	±16 *g*	±2 *g*
10	±4 *g*	±4 *g*
11	±8 *g*	±8 *g*

9.13 CTRL2_G (11h)

Gyroscope control register 2 (R/W)

Table 46. CTRL2_G register

ODR_G3	ODR_G2	ODR_G1	ODR_G0	FS1_G	FS0_G	FS_125	0[1]

1. *This bit must be set to 0 for the correct operation of the device.*

Table 47. CTRL2_G register description

ODR_G[3:0]	Gyroscope output data rate selection. Default value: 0000 (Refer to Table 48)
FS[1:0]_G	Gyroscope UI chain full-scale selection (00: ±250 dps; 01: ±500 dps; 10: ±1000 dps; 11: ±2000 dps)
FS_125	Selects gyro UI chain full-scale ±125 dps (0: FS selected through bits FS[1:0]_G; 1: FS set to ±125 dps)

Table 48. Gyroscope ODR configuration setting

ODR_G3	ODR_G2	ODR_G1	ODR_G0	ODR [Hz] when G_HM_MODE = 1 in CTRL7_G (16h)	ODR [Hz] when G_HM_MODE = 0 in CTRL7_G (16h)
0	0	0	0	Power-down	Power-down
0	0	0	1	12.5 Hz (low power)	12.5 Hz (high performance)
0	0	1	0	26 Hz (low power)	26 Hz (high performance)
0	0	1	1	52 Hz (low power)	52 Hz (high performance)
0	1	0	0	104 Hz (normal mode)	104 Hz (high performance)
0	1	0	1	208 Hz (normal mode)	208 Hz (high performance)
0	1	1	0	416 Hz (high performance)	416 Hz (high performance)
0	1	1	1	833 Hz (high performance)	833 Hz (high performance)
1	0	0	0	1.66 kHz (high performance)	1.66 kHz (high performance)
1	0	0	1	3.33 kHz (high performance	3.33 kHz (high performance)
1	0	1	0	6.66 kHz (high performance	6.66 kHz (high performance)
1	0	1	1	Not available	Not available

9.14 CTRL3_C (12h)

Control register 3 (R/W)

Table 49. CTRL3_C register

BOOT	BDU	H_LACTIVE	PP_OD	SIM	IF_INC	0[1]	SW_RESET

1. *This bit must be set to 0 for the correct operation of the device.*

Table 50. CTRL3_C register description

BOOT	Reboots memory content. Default value: 0 (0: normal mode; 1: reboot memory content) This bit is automatically cleared.
BDU	Block data update. Default value: 0 (0: continuous update; 1: output registers are not updated until MSB and LSB have been read)
H_LACTIVE	Interrupt activation level. Default value: 0 (0: interrupt output pins active high; 1: interrupt output pins active low)
PP_OD	Push-pull/open-drain selection on the INT1 and INT2 pins. Default value: 0 (0: push-pull mode; 1: open-drain mode)
SIM	SPI serial interface mode selection. Default value: 0 (0: 4-wire interface; 1: 3-wire interface)
IF_INC	Register address automatically incremented during a multiple byte access with a serial interface (I²C or SPI). Default value: 1 (0: disabled; 1: enabled)
SW_RESET	Software reset. Default value: 0 (0: normal mode; 1: reset device) This bit is automatically cleared.

9.15 CTRL4_C (13h)

Control register 4 (R/W)

Table 51. CTRL4_C register

0[1]	SLEEP_G	INT2_on _INT1	0[1]	DRDY_MASK	I2C_disable	LPF1_ SEL_G	0[1]

1. *This bit must be set to 0 for the correct operation of the device.*

Table 52. CTRL4_C register description

SLEEP_G	Enables gyroscope sleep mode. Default value: 0 (0: disabled; 1: enabled)
INT2_on_INT1	Enables all interrupt signals available on the INT1 pin. Default value: 0 (0: interrupt signals divided between the INT1 and INT2 pins; 1: all interrupt signals in logic or on the INT1 pin)
DRDY_MASK	Enables data available (0: disabled; 1: mask DRDY on pin (both accelerometer and gyroscope) until filter settling ends (accelerometer and gyroscope independently masked).
I2C_disable	Disables I²C interface. Default value: 0 (0: SPI, I²C, and MIPI I3C^{SM} interfaces enabled (default); 1: I²C interface disabled)
LPF1_SEL_G	Enables gyroscope digital LPF1 if the auxiliary SPI is disabled; the bandwidth can be selected through FTYPE[2:0] in CTRL6_C (15h). (0: disabled; 1: enabled)

9.16 CTRL5_C (14h)

Control register 5 (R/W)

Table 53. CTRL5_C register

XL_ULP_EN	ROUNDING1	ROUNDING0	0[1]	ST1_G	ST0_G	ST1_XL	ST0_XL

1. *This bit must be set to 0 for the correct operation of the device.*

Table 54. CTRL5_C register description

XL_ULP_EN	Enables accelerometer ultralow-power mode. Default value: 0[1] (0: Ultralow-power mode disabled; 1: Ultralow-power mode enabled)
ROUNDING[1:0]	Circular burst mode (wraparound) read from the output registers. Default value: 00 (00: no wraparound; 01: accelerometer only; 10: gyroscope only; 11: gyroscope + accelerometer)
ST[1:0]_G	Enables angular rate sensor self-test. Default value: 00 (00: self-test disabled; other: refer to Table 55)
ST[1:0]_XL	Enables linear acceleration sensor self-test. Default value: 00 (00: self-test disabled; other: refer to Table 56)

1. *Further details about the accelerometer ultralow-power mode are provided in Section 6.2.1: Accelerometer ultra-low-power mode.*

Table 55. Angular rate sensor self-test mode selection

ST1_G	ST0_G	Self-test mode
0	0	Normal mode
0	1	Positive sign self-test
1	0	Not allowed
1	1	Negative sign self-test

Table 56. Linear acceleration sensor self-test mode selection

ST1_XL	ST0_XL	Self-test mode
0	0	Normal mode
0	1	Positive sign self-test
1	0	Negative sign self-test
1	1	Not allowed

9.17 CTRL6_C (15h)

Control register 6 (R/W)

Table 57. CTRL6_C register

TRIG_EN	LVL1_EN	LVL2_EN	XL_HM _MODE	USR_ OFF_W	FTYPE_2	FTYPE_1	FTYPE_0

Table 58. CTRL6_C register description

TRIG_EN	Enables DEN data edge-sensitive trigger mode. Refer to Table 59.
LVL1_EN	Enables DEN data level-sensitive trigger mode. Refer to Table 59.
LVL2_EN	Enables DEN level-sensitive latched mode. Refer to Table 59.
XL_HM_MODE	Disables high-performance operating mode for the accelerometer. Default value: 0 (0: high-performance operating mode enabled; 1: high-performance operating mode disabled)
USR_OFF_W	Weight of the accelerometer user offset bits of registers X_OFS_USR (73h), Y_OFS_USR (74h), Z_OFS_USR (75h) (0: 2^{-10} *g*/LSB; 1: 2^{-6} *g*/LSB)
FTYPE[2:0]	Gyroscope low-pass filter (LPF1) bandwidth selection. Table 60 shows the selectable bandwidth values (available if the auxiliary SPI is disabled).

Table 59. Trigger mode selection

TRIG_EN, LVL1_EN, LVL2_EN	Trigger mode
100	Edge-sensitive trigger mode is selected.
010	Level-sensitive trigger mode is selected.
011	Level-sensitive latched mode is selected.
110	Level-sensitive FIFO enable mode is selected.

Table 60. Gyroscope LPF1 bandwidth selection

FTYPE [2:0]	12.5 Hz	26 Hz	52 Hz	104 Hz	208 Hz	416 Hz	833 Hz	1.67 kHz	3.33 kHz	6.67 kHz
000	4.2	8.3	16.6	33.0	67.0	136.6	239.2	304.2	328.5	335.5
001	4.2	8.3	16.6	33.0	67.0	130.5	192.4	220.7	229.6	232.0
010	4.2	8.3	16.6	33.0	67.0	120.3	154.2	166.6	170.1	171.1
011	4.2	8.3	16.6	33.0	67.0	137.1	281.8	453.2	559.2	609.0
100	4.2	8.3	16.7	33.0	62.4	86.7	96.6	99.6	NA	NA
101	4.2	8.3	16.8	31.0	43.2	48.0	49.4	49.8	NA	NA
110	4.1	7.8	13.4	19.0	23.1	24.6	25.0	25.1	NA	NA
111	3.9	6.7	9.7	11.5	12.2	12.4	12.5	12.5	NA	NA

9.18 CTRL7_G (16h)

Control register 7 (R/W)

Table 61. CTRL7_G register

G_HM_MODE	HP_EN_G	HPM1_G	HPM0_G	0[1]	OIS_ON_EN	USR_OFF_ON_OUT	OIS_ON

1. *This bit must be set to 0 for the correct operation of the device.*

Table 62. CTRL7_G register description

G_HM_MODE	Disables high-performance operating mode for gyroscope. Default value: 0 (0: high-performance operating mode enabled; 1: high-performance operating mode disabled)
HP_EN_G	Enables gyroscope digital high-pass filter. The filter is enabled only if the gyroscope is in HP mode. Default value: 0 (0: HPF disabled; 1: HPF enabled)
HPM_G[1:0]	Gyroscope digital HP filter cutoff selection. Default: 00 (00: 16 mHz; 01: 65 mHz; 10: 260 mHz; 11: 1.04 Hz)
OIS_ON_EN[1]	Selects how to enable and disable the OIS chain, after first configuration and enabling through SPI2. (0: OIS chain is enabled/disabled with SPI2 interface; 1: OIS chain is enabled/disabled with primary interface)
USR_OFF_ON_OUT	Enables accelerometer user offset correction block; it is valid for the low-pass path - see Figure 17. Accelerometer composite filter. Default value: 0 (0: accelerometer user offset correction block bypassed; 1: accelerometer user offset correction block enabled)
OIS_ON[1]	Enables/disables the OIS chain from the primary interface when the OIS_ON_EN bit is 1. (0: OIS disabled; 1: OIS enabled)

1. *First, enabling OIS and OIS configurations must be done through SPI2, with OIS_ON_EN and OIS_ON set to 0.*

9.19 CTRL8_XL (17h)

Control register 8 (R/W)

Table 63. CTRL8_XL register

HPCF_XL_2	HPCF_XL_1	HPCF_XL_0	HP_REF_ MODE_XL	FASTSETTL_ MODE_XL	HP_SLOPE_ XL_EN	XL_FS_ MODE	LOW_PASS_ ON_6D

Table 64. CTRL8_XL register description

HPCF_XL_[2:0]	Accelerometer LPF2 and HP filter configuration and cutoff setting. Refer to Table 65.
HP_REF_MODE_XL	Enables accelerometer high-pass filter reference mode (valid for high-pass path - HP_SLOPE_XL_EN bit must be 1). Default value: 0[(1)] (0: disabled, 1: enabled)
FASTSETTL_MODE_XL	Enables accelerometer LPF2 and HPF fast-settling mode. The filter sets the second samples after writing this bit. Active only during device exit from power- down mode. Default value: 0 (0: disabled, 1: enabled)
HP_SLOPE_XL_EN	Accelerometer slope filter / high-pass filter selection. Refer to Figure 24. Accelerometer block diagram.
XL_FS_MODE	Accelerometer full-scale management between UI chain and OIS chain (0: old full-scale mode. When XL UI is on, the full scale is the same between UI/OIS and is chosen by the UI CTRL registers; when XL UI is in PD, the OIS can choose the FS. 1: new full-scale mode. Full scales are independent between the UI/OIS chain but both bound to ±8 *g*.)
LOW_PASS_ON_6D	LPF2 on 6D function selection. Refer to Figure 24. Default value: 0 (0: ODR/2 low-pass filtered data sent to 6D interrupt function; 1: LPF2 output data sent to 6D interrupt function)

1. *When enabled, the first output data have to be discarded.*

Table 65. **Accelerometer bandwidth configurations**

Filter type	HP_SLOPE_ XL_EN	LPF2_XL_EN	HPCF_XL_[2:0]	Bandwidth
Low pass	0	0	-	ODR/2
		1	000	ODR/4
			001	ODR/10
			010	ODR/20
			011	ODR/45
			100	ODR/100
			101	ODR/200
			110	ODR/400
			111	ODR/800
High pass	1	-	000	SLOPE (ODR/4)
			001	ODR/10
			010	ODR/20
			011	ODR/45
			100	ODR/100
			101	ODR/200
			110	ODR/400
			111	ODR/800

Figure 24. Accelerometer block diagram

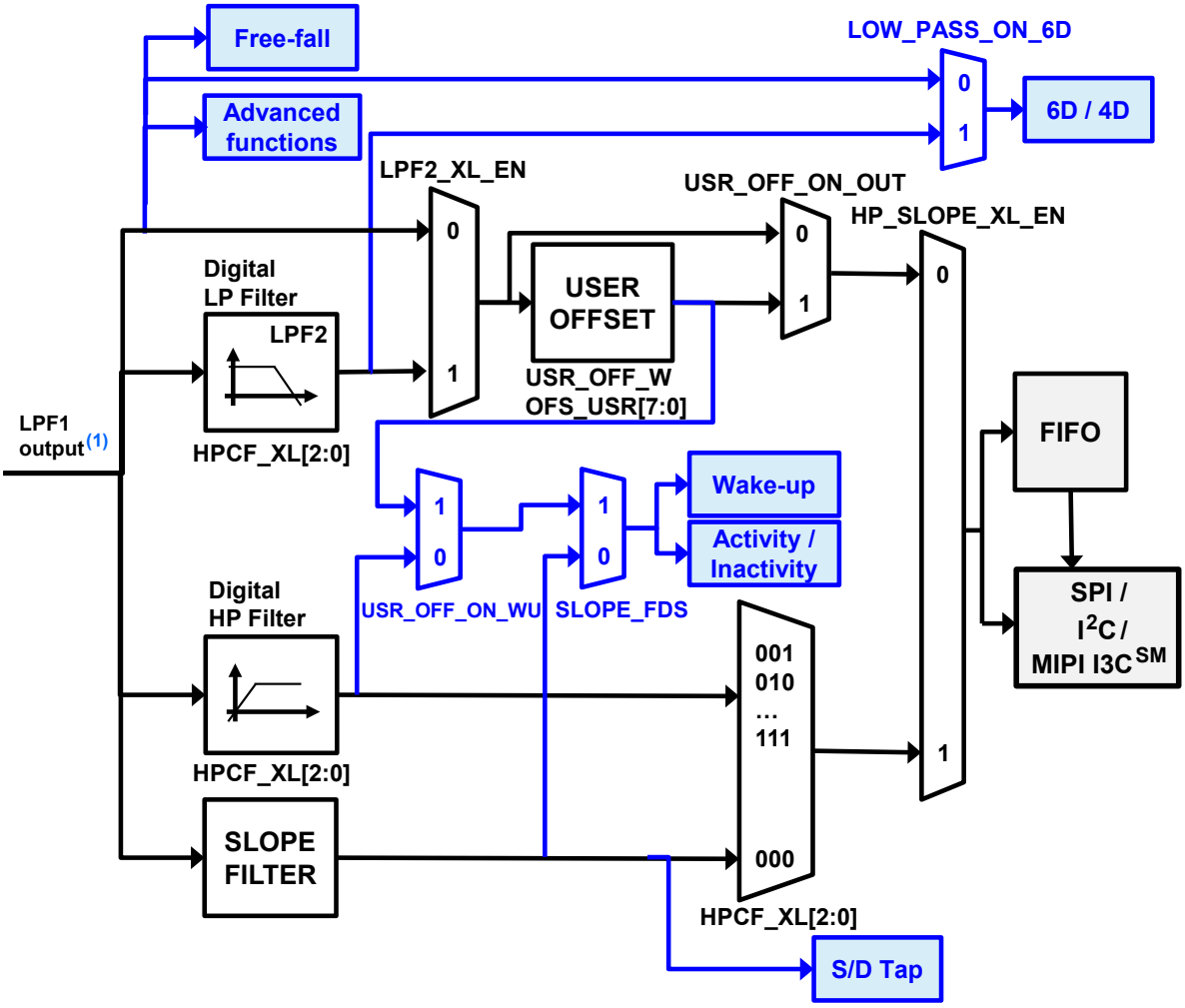

9.20 CTRL9_XL (18h)

Control register 9 (R/W)

Table 66. CTRL9_XL register

DEN_X	DEN_Y	DEN_Z	DEN_XL_G	DEN_XL_EN	DEN_LH	I3C_disable	0[(1)]

1. *This bit must be set to 0 for the correct operation of the device.*

Table 67. CTRL9_XL register description

DEN_X	DEN value stored in LSB of X-axis. Default value: 1 (0: DEN not stored in X-axis LSB; 1: DEN stored in X-axis LSB)
DEN_Y	DEN value stored in LSB of Y-axis. Default value: 1 (0: DEN not stored in Y-axis LSB; 1: DEN stored in Y-axis LSB)
DEN_Z	DEN value stored in LSB of Z-axis. Default value: 1 (0: DEN not stored in Z-axis LSB; 1: DEN stored in Z-axis LSB)
DEN_XL_G	DEN stamping sensor selection. Default value: 0 (0: DEN pin info stamped in the gyroscope axis selected by bits [7:5]; 1: DEN pin info stamped in the accelerometer axis selected by bits [7:5])
DEN_XL_EN	Extends DEN functionality to accelerometer sensor. Default value: 0 (0: disabled; 1: enabled)
DEN_LH	DEN active level configuration. Default value: 0 (0: active low; 1: active high)
I3C_disable	Disables MIPI I3C^{SM} communication protocol[(1)] (0: SPI, I²C, MIPI I3C^{SM} interfaces enabled (default); 1: MIPI I3C^{SM} interface disabled)

1. *It is recommended to set this bit to 1 during the initial device configuration phase, when the I3C interface is not used.*

9.21 CTRL10_C (19h)

Control register 10 (R/W)

Table 68. CTRL10_C register

0[1]	0[1]	TIMESTAMP _EN	0[1]	0[1]	0[1]	0[1]	0[1]

1. *This bit must be set to 0 for the correct operation of the device.*

Table 69. CTRL10_C register description

TIMESTAMP_EN	Enables timestamp counter. Default value: 0 (0: disabled; 1: enabled) The counter is readable in TIMESTAMP0 (40h), TIMESTAMP1 (41h), TIMESTAMP2 (42h), and TIMESTAMP3 (43h).

9.22 ALL_INT_SRC (1Ah)

Source register for all interrupts (R)

Table 70. ALL_INT_SRC register

TIMESTAMP _ENDCOUNT	0	SLEEP_ CHANGE_IA	D6D_IA	DOUBLE_ TAP	SINGLE_ TAP	WU_IA	FF_IA

Table 71. ALL_INT_SRC register description

TIMESTAMP_ENDCOUNT	Alerts timestamp overflow within 6.4 ms
SLEEP_CHANGE_IA	Detects change event in activity/inactivity status. Default value: 0 (0: change status not detected; 1: change status detected)
D6D_IA	Interrupt active for change in position of portrait, landscape, face-up, face-down. Default value: 0 (0: change in position not detected; 1: change in position detected)
DOUBLE_TAP	Double-tap event status. Default value: 0 (0: event not detected, 1: event detected)
SINGLE_TAP	Single-tap event status. Default value: 0 (0: event not detected, 1: event detected)
WU_IA	Wake-up event status. Default value: 0 (0: event not detected, 1: event detected)
FF_IA	Free-fall event status. Default value: 0 (0: event not detected, 1: event detected)

9.23 WAKE_UP_SRC (1Bh)

Wake-up interrupt source register (R)

Table 72. WAKE_UP_SRC register

0	SLEEP_ CHANGE_IA	FF_IA	SLEEP_ STATE	WU_IA	X_WU	Y_WU	Z_WU

Table 73. WAKE_UP_SRC register description

SLEEP_ CHANGE_IA	Detects change event in activity/inactivity status. Default value: 0 (0: change status not detected; 1: change status detected)
FF_IA	Free-fall event detection status. Default value: 0 (0: free-fall event not detected; 1: free-fall event detected)
SLEEP_STATE	Sleep status bit. Default value: 0 (0: activity status; 1: inactivity status)
WU_IA	Wake-up event detection status. Default value: 0 (0: wake-up event not detected; 1: wake-up event detected.)
X_WU	Wake-up event detection status on X-axis. Default value: 0 (0: wake-up event on X-axis not detected; 1: wake-up event on X-axis detected)
Y_WU	Wake-up event detection status on Y-axis. Default value: 0 (0: wake-up event on Y-axis not detected; 1: wake-up event on Y-axis detected)
Z_WU	Wake-up event detection status on Z-axis. Default value: 0 (0: wake-up event on Z-axis not detected; 1: wake-up event on Z-axis detected)

9.24 TAP_SRC (1Ch)

Tap source register (R)

Table 74. TAP_SRC register

0	TAP_IA	SINGLE_ TAP	DOUBLE_ TAP	TAP_SIGN	X_TAP	Y_TAP	Z_TAP

Table 75. TAP_SRC register description

TAP_IA	Tap event detection status. Default: 0 (0: tap event not detected; 1: tap event detected)
SINGLE_TAP	Single-tap event status. Default value: 0 (0: single tap event not detected; 1: single tap event detected)
DOUBLE_TAP	Double-tap event detection status. Default value: 0 (0: double-tap event not detected; 1: double-tap event detected.)
TAP_SIGN	Sign of acceleration detected by tap event. Default: 0 (0: positive sign of acceleration detected by tap event; 1: negative sign of acceleration detected by tap event)
X_TAP	Tap event detection status on X-axis. Default value: 0 (0: tap event on X-axis not detected; 1: tap event on X-axis detected)
Y_TAP	Tap event detection status on Y-axis. Default value: 0 (0: tap event on Y-axis not detected; 1: tap event on Y-axis detected)
Z_TAP	Tap event detection status on Z-axis. Default value: 0 (0: tap event on Z-axis not detected; 1: tap event on Z-axis detected)

9.25 D6D_SRC (1Dh)

Portrait, landscape, face-up, and face-down source register (R)

Table 76. D6D_SRC register

DEN_DRDY	D6D_IA	ZH	ZL	YH	YL	XH	XL

Table 77. D6D_SRC register description

DEN_DRDY	DEN data-ready signal. It is set high when the data output is related to the data coming from a DEN active condition.[1]
D6D_IA	Interrupt active for change position portrait, landscape, face-up, face-down. Default value: 0 (0: change position not detected; 1: change position detected)
ZH	Z-axis high event (over threshold). Default value: 0 (0: event not detected; 1: event (over threshold) detected)
ZL	Z-axis low event (under threshold). Default value: 0 (0: event not detected; 1: event (under threshold) detected)
YH	Y-axis high event (over threshold). Default value: 0 (0: event not detected; 1: event (overthreshold) detected)
YL	Y-axis low event (under threshold). Default value: 0 (0: event not detected; 1: event (under threshold) detected)
XH	X-axis high event (over threshold). Default value: 0 (0: event not detected; 1: event (over threshold) detected)
XL	X-axis low event (under threshold). Default value: 0 (0: event not detected; 1: event (under threshold) detected)

1. *The DEN data-ready signal can be latched or pulsed depending on the value of the dataready_pulsed bit of the COUNTER_BDR_REG1 (0Bh) register.*

9.26 STATUS_REG (1Eh) / STATUS_SPIAux (1Eh)

The STATUS_REG register is read by the primary interface SPI/I²C & MIPI I3C^{SM} (R)

Table 78. STATUS_REG register

0	0	0	0	0	TDA	GDA	XLDA

Table 79. STATUS_REG register description

TDA	Temperature new data available. Default: 0 (0: no set of data is available at temperature sensor output; 1: a new set of data is available at temperature sensor output)
GDA	Gyroscope new data available. Default value: 0 (0: no set of data available at gyroscope output; 1: a new set of data is available at gyroscope output)
XLDA	Accelerometer new data available. Default value: 0 (0: no set of data available at accelerometer output; 1: a new set of data is available at accelerometer output)

The STATUS_SPIAux register is read by the auxiliary SPI.

Table 80. STATUS_SPIAux register

0	0	0	0	0	GYRO_ SETTLING	GDA	XLDA

Table 81. STATUS_SPIAux description

GYRO_SETTLING	High when the gyroscope output is in the settling phase
GDA	Gyroscope data available (reset when one of the high parts of the output data is read)
XLDA	Accelerometer data available (reset when one of the high parts of the output data is read)

9.27 OUT_TEMP_L (20h), OUT_TEMP_H (21h)

Temperature data output register (R). L and H registers together express a 16-bit word in two's complement.

Table 82. OUT_TEMP_L register

Temp7	Temp6	Temp5	Temp4	Temp3	Temp2	Temp1	Temp0

Table 83. OUT_TEMP_H register

Temp15	Temp14	Temp13	Temp12	Temp11	Temp10	Temp9	Temp8

Table 84. OUT_TEMP register description

Temp[15:0]	Temperature sensor output data The value is expressed as two's complement sign extended on the MSB.

9.28 OUTX_L_G (22h) and OUTX_H_G (23h)

Angular rate sensor pitch axis (X) angular rate output register (R). The value is expressed as a 16-bit word in two's complement.

If this register is read by the primary interface, data are according to the full scale and ODR settings (CTRL2_G (11h)) of the gyroscope user interface.

If this register is read by the auxiliary interface, data are according to the full scale and ODR (6.66 kHz) settings of the OIS gyroscope.

Table 85. OUTX_L_G register

D7	D6	D5	D4	D3	D2	D1	D0

Table 86. OUTX_H_G register

D15	D14	D13	D12	D11	D10	D9	D8

Table 87. OUTX_H_G register description

D[15:0]	Pitch axis (X) angular rate value D[15:0] expressed in two's complement and its value depends on the interface used: SPI1/I²C/MIPI I3C^{SM}: gyroscope UI chain pitch axis output SPI2: gyroscope OIS chain pitch axis output

9.29 OUTY_L_G (24h) and OUTY_H_G (25h)

Angular rate sensor roll axis (Y) angular rate output register (R). The value is expressed as a 16-bit word in two's complement.

If this register is read by the primary interface, data are according to the full scale and ODR settings (CTRL2_G (11h)) of the gyroscope user interface.

If this register is read by the auxiliary interface, data are according to the full scale and ODR (6.66 kHz) settings of the OIS gyroscope.

Table 88. OUTY_L_G register

D7	D6	D5	D4	D3	D2	D1	D0

Table 89. OUTY_H_G register

D15	D14	D13	D12	D11	D10	D9	D8

Table 90. OUTY_H_G register description

D[15:0]	Roll axis (Y) angular rate value D[15:0] expressed in two's complement and its value depends on the interface used: SPI1/I²C/MIPI I3C^{SM}: gyroscope UI chain roll axis output SPI2: gyroscope OIS chain roll axis output

9.30 OUTZ_L_G (26h) and OUTZ_H_G (27h)

Angular rate sensor yaw axis (Z) angular rate output register (R). The value is expressed as a 16-bit word in two's complement.

If this register is read by the primary interface, data are according to the full scale and ODR settings (CTRL2_G (11h)) of the gyroscope user interface.

If this register is read by the auxiliary interface, data are according to the full scale and ODR (6.66 kHz) settings of the OIS gyroscope.

Table 91. OUTZ_L_G register

D7	D6	D5	D4	D3	D2	D1	D0

Table 92. OUTZ_H_G register

D15	D14	D13	D12	D11	D10	D9	D8

Table 93. OUTZ_H_G register description

D[15:0]	Yaw axis (Z) angular rate value D[15:0] expressed in two's complement and its value depends on the interface used: SPI1/I²C/MIPI I3C^{SM}: gyroscope UI chain yaw axis output SPI2: gyroscope OIS chain yaw axis output

9.31 OUTX_L_A (28h) and OUTX_H_A (29h)

Linear acceleration sensor X-axis output register (R). The value is expressed as a 16-bit word in two's complement.

If this register is read by the primary interface, data are according to the full-scale and ODR settings (CTRL1_XL (10h)) of the accelerometer user interface.

If this register is read by the auxiliary interface, data are according to the full-scale and ODR (6.66 kHz) settings of the OIS (CTRL3_OIS (72h)).

Table 94. OUTX_L_A register

D7	D6	D5	D4	D3	D2	D1	D0

Table 95. OUTX_H_A register

D15	D14	D13	D12	D11	D10	D9	D8

Table 96. OUTX_H_A register description

D[15:0]	X-axis linear acceleration value. D[15:0] expressed in two's complement and its value depends on the interface used: SPI1/I²C/MIPI I3C^{SM}: accelerometer UI chain X-axis output SPI2: accelerometer OIS chain X-axis output

9.32 OUTY_L_A (2Ah) and OUTY_H_A (2Bh)

Linear acceleration sensor Y-axis output register (R). The value is expressed as a 16-bit word in two's complement.

If this register is read by the primary interface, data are according to the full-scale and ODR settings (CTRL1_XL (10h)) of the accelerometer user interface.

If this register is read by the auxiliary interface, data are according to the full-scale and ODR (6.66 kHz) settings of the OIS (CTRL3_OIS (72h)).

Table 97. OUTY_L_A register

D7	D6	D5	D4	D3	D2	D1	D0

Table 98. OUTY_H_A register

D15	D14	D13	D12	D11	D10	D9	D8

Table 99. OUTY_H_A register description

D[15:0]	Y-axis linear acceleration value D[15:0] expressed in two's complement and its value depends on the interface used: SPI1/I²C/MIPI I3C^{SM}: accelerometer UI chain Y-axis output SPI2: accelerometer OIS chain Y-axis output

9.33 OUTZ_L_A (2Ch) and OUTZ_H_A (2Dh)

Linear acceleration sensor Z-axis output register (R). The value is expressed as a 16-bit word in two's complement.

If this register is read by the primary interface, data are according to the full-scale and ODR settings (CTRL1_XL (10h)) of the accelerometer user interface.

If this register is read by the auxiliary interface, data are according to the full-scale and ODR (6.66 kHz) settings of the OIS (CTRL3_OIS (72h)).

Table 100. OUTZ_L_A register

D7	D6	D5	D4	D3	D2	D1	D0

Table 101. OUTZ_H_A register

D15	D14	D13	D12	D11	D10	D9	D8

Table 102. OUTZ_H_A register description

D[15:0]	Z-axis linear acceleration value D[15:0] expressed in two's complement and its value depends on the interface used: SPI1/I²C/MIPI I3C^{SM}: accelerometer UI chain Z-axis output SPI2: accelerometer OIS chain Z-axis output

9.34 EMB_FUNC_STATUS_MAINPAGE (35h)

Embedded function status register (R)

Table 103. EMB_FUNC_STATUS_MAINPAGE register

IS_FSM_LC	0	IS_SIGMOT	IS_TILT	IS_STEP_DET	0	0	0

Table 104. EMB_FUNC_STATUS_MAINPAGE register description

IS_FSM_LC	Interrupt status bit for FSM long counter timeout interrupt event (1: interrupt detected; 0: no interrupt)
IS_SIGMOT	Interrupt status bit for significant motion detection (1: interrupt detected; 0: no interrupt)
IS_TILT	Interrupt status bit for tilt detection (1: interrupt detected; 0: no interrupt)
IS_STEP_DET	Interrupt status bit for step detection (1: interrupt detected; 0: no interrupt)

9.35 FSM_STATUS_A_MAINPAGE (36h)

Finite state machine status register (R)

Table 105. FSM_STATUS_A_MAINPAGE register

IS_FSM8	IS_FSM7	IS_FSM6	IS_FSM5	IS_FSM4	IS_FSM3	IS_FSM2	IS_FSM1

Table 106. FSM_STATUS_A_MAINPAGE register description

IS_FSM8	Interrupt status bit for FSM8 interrupt event (1: interrupt detected; 0: no interrupt)
IS_FSM7	Interrupt status bit for FSM7 interrupt event (1: interrupt detected; 0: no interrupt)
IS_FSM6	Interrupt status bit for FSM6 interrupt event (1: interrupt detected; 0: no interrupt)
IS_FSM5	Interrupt status bit for FSM5 interrupt event (1: interrupt detected; 0: no interrupt)
IS_FSM4	Interrupt status bit for FSM4 interrupt event (1: interrupt detected; 0: no interrupt)
IS_FSM3	Interrupt status bit for FSM3 interrupt event (1: interrupt detected; 0: no interrupt)
IS_FSM2	Interrupt status bit for FSM2 interrupt event (1: interrupt detected; 0: no interrupt)
IS_FSM1	Interrupt status bit for FSM1 interrupt event (1: interrupt detected; 0: no interrupt)

9.36 FSM_STATUS_B_MAINPAGE (37h)

Finite state machine status register (R)

Table 107. FSM_STATUS_B_MAINPAGE register

IS_FSM16	IS_FSM15	IS_FSM14	IS_FSM13	IS_FSM12	IS_FSM11	IS_FSM10	IS_FSM9

Table 108. FSM_STATUS_B_MAINPAGE register description

IS_FSM16	Interrupt status bit for FSM16 interrupt event (1: interrupt detected; 0: no interrupt)
IS_FSM15	Interrupt status bit for FSM15 interrupt event (1: interrupt detected; 0: no interrupt)
IS_FSM14	Interrupt status bit for FSM14 interrupt event (1: interrupt detected; 0: no interrupt)
IS_FSM13	Interrupt status bit for FSM13 interrupt event (1: interrupt detected; 0: no interrupt)
IS_FSM12	Interrupt status bit for FSM12 interrupt event (1: interrupt detected; 0: no interrupt)
IS_FSM11	Interrupt status bit for FSM11 interrupt event (1: interrupt detected; 0: no interrupt)
IS_FSM10	Interrupt status bit for FSM10 interrupt event (1: interrupt detected; 0: no interrupt)
IS_FSM9	Interrupt status bit for FSM9 interrupt event (1: interrupt detected; 0: no interrupt)

9.37 STATUS_MASTER_MAINPAGE (39h)

Sensor hub source register (R)

Table 109. STATUS_MASTER_MAINPAGE register

WR_ONCE_ DONE	SLAVE3_ NACK	SLAVE2_ NACK	SLAVE1_ NACK	SLAVE0_ NACK	0	0	SENS_HUB_ ENDOP

Table 110. STATUS_MASTER_MAINPAGE register description

WR_ONCE_DONE	When the bit WRITE_ONCE in MASTER_CONFIG (14h) is configured as 1, this bit is set to 1 when the write operation on slave 0 has been performed and completed. Default value: 0
SLAVE3_NACK	This bit is set to 1 if not acknowledge occurs on slave 3 communication. Default value: 0
SLAVE2_NACK	This bit is set to 1 if not acknowledge occurs on slave 2 communication. Default value: 0
SLAVE1_NACK	This bit is set to 1 if not acknowledge occurs on slave 1 communication. Default value: 0
SLAVE0_NACK	This bit is set to 1 if not acknowledge occurs on slave 0 communication. Default value: 0
SENS_HUB_ENDOP	Sensor hub communication status. Default value: 0 (0: sensor hub communication not concluded; 1: sensor hub communication concluded)

9.38 FIFO_STATUS1 (3Ah)

FIFO status register 1 (R)

Table 111. FIFO_STATUS1 register

DIFF_ FIFO_7	DIFF_ FIFO_6	DIFF_ FIFO_5	DIFF_ FIFO_4	DIFF_ FIFO_3	DIFF_ FIFO_2	DIFF_ FIFO_1	DIFF_ FIFO_0

Table 112. FIFO_STATUS1 register description

DIFF_FIFO_[7:0]	Number of unread sensor data (TAG + 6 bytes) stored in FIFO in conjunction with DIFF_FIFO[9:8] in FIFO_STATUS2 (3Bh)

9.39 FIFO_STATUS2 (3Bh)

FIFO status register 2 (R)

Table 113. FIFO_STATUS2 register

FIFO_ WTM_IA	FIFO_ OVR_IA	FIFO_ FULL_IA	COUNTER _BDR_IA	FIFO_OVR_ LATCHED	0	DIFF_ FIFO_9	DIFF_ FIFO_8

Table 114. FIFO_STATUS2 register description

FIFO_WTM_IA	FIFO watermark status. Default value: 0 (0: FIFO filling is lower than WTM; 1: FIFO filling is equal to or greater than WTM) Watermark is set through bits WTM[8:0] in FIFO_CTRL2 (08h) and FIFO_CTRL1 (07h).
FIFO_OVR_IA	FIFO overrun status. Default value: 0 (0: FIFO is not completely filled; 1: FIFO is completely filled)
FIFO_FULL_IA	Smart FIFO full status. Default value: 0 (0: FIFO is not full; 1: FIFO is full at the next ODR)
COUNTER_BDR_IA	Counter BDR reaches the CNT_BDR_TH_[10:0] threshold set in COUNTER_BDR_REG1 (0Bh) and COUNTER_BDR_REG2 (0Ch). Default value: 0 This bit is reset when these registers are read.
FIFO_OVR_LATCHED	Latched FIFO overrun status. Default value: 0 This bit is reset when this register is read.
DIFF_FIFO_[9:8]	Number of unread sensor data (TAG + 6 bytes) stored in FIFO in conjunction with DIFF_FIFO[7:0] in FIFO_STATUS1 (3Ah). Default value: 00

9.40 TIMESTAMP0 (40h), TIMESTAMP1 (41h), TIMESTAMP2 (42h), and TIMESTAMP3 (43h)

Timestamp first data output register (R). The value is expressed as a 32-bit word and the bit resolution is 25 µs.

Table 115. TIMESTAMP output registers

D31	D30	D29	D28	D27	D26	D25	D24
D23	D22	D21	D20	D19	D18	D17	D16
D15	D14	D13	D12	D11	D10	D9	D8
D7	D6	D5	D4	D3	D2	D1	D0

Table 116. TIMESTAMP output register description

D[31:0]	Timestamp output registers: 1LSB = 25 µs

9.41 TAP_CFG0 (56h)

Activity/inactivity functions, configuration of filtering, and tap recognition functions (R/W)

Table 117. TAP_CFG0 register

0[1]	INT_CLR_ ON_READ	SLEEP_STATUS _ON_INT	SLOPE_FDS	TAP_X_EN	TAP_Y_EN	TAP_Z_EN	LIR

1. *This bit must be set to 0 for the correct operation of the device.*

Table 118. TAP_CFG0 register description

INT_CLR_ON_READ	This bit allows immediately clearing the latched interrupts of an event detection upon the read of the corresponding status register. It must be set to 1 together with LIR. Default value: 0 (0: latched interrupt signal cleared at the end of the ODR period; 1: latched interrupt signal immediately cleared)
SLEEP_STATUS_ON_INT	Activity/inactivity interrupt mode configuration. If the INT1_SLEEP_CHANGE or INT2_SLEEP_CHANGE bits are enabled, this bit drives the sleep status or sleep change on the INT pins. Default value: 0 (0: sleep change notification on INT pins; 1: sleep status reported on INT pins)
SLOPE_FDS	HPF or SLOPE filter selection on wake-up and Activity/Inactivity functions. Default value: 0 (0: SLOPE filter applied; 1: HPF applied)
TAP_X_EN	Enables X direction in tap recognition. Default value: 0 (0: X direction disabled; 1: X direction enabled)
TAP_Y_EN	Enables Y direction in tap recognition. Default value: 0 (0: Y direction disabled; 1: Y direction enabled)
TAP_Z_EN	Enables Z direction in tap recognition. Default value: 0 (0: Z direction disabled; 1: Z direction enabled)
LIR	Latched interrupt. Default value: 0 (0: interrupt request not latched; 1: interrupt request latched)

9.42 TAP_CFG1 (57h)

Tap configuration register (R/W)

Table 119. TAP_CFG1 register

TAP_ PRIORITY_2	TAP_ PRIORITY_1	TAP_ PRIORITY_0	TAP_THS_X_4	TAP_THS_X_3	TAP_THS_X_2	TAP_THS_X_1	TAP_THS_X_0

Table 120. TAP_CFG1 register description

TAP_PRIORITY_[2:0]	Selection of axis priority for tap detection (see Table 121)
TAP_THS_X_[4:0]	X-axis tap recognition threshold. Default value: 0 1 LSB = FS_XL / (2^5)

Table 121. TAP priority decoding

TAP_PRIORITY_[2:0]	Max. priority	Mid. priority	Min. priority
000	X	Y	Z
001	Y	X	Z
010	X	Z	Y
011	Z	Y	X
100	X	Y	Z
101	Y	Z	X
110	Z	X	Y
111	Z	Y	X

9.43 TAP_CFG2 (58h)

Enables interrupt and inactivity functions and tap recognition functions (R/W)

Table 122. TAP_CFG2 register

INTERRUPTS_ ENABLE	INACT_EN1	INACT_EN0	TAP_THS_Y_4	TAP_THS_Y_3	TAP_THS_Y_2	TAP_THS_Y_1	TAP_THS_Y_0

Table 123. TAP_CFG2 register description

INTERRUPTS_ ENABLE	Enables basic interrupts (6D/4D, free-fall, wake-up, tap, inactivity). Default value: 0 (0: interrupt disabled; 1: interrupt enabled)
INACT_EN[1:0]	Enables activity/inactivity (sleep) function. Default value: 00 (00: stationary/motion-only interrupts generated, accelerometer and gyroscope do not change; 01: sets accelerometer ODR to 12.5 Hz (low-power mode), gyroscope does not change; 10: sets accelerometer ODR to 12.5 Hz (low-power mode), gyroscope to sleep mode; 11: sets accelerometer ODR to 12.5 Hz (low-power mode), gyroscope to power-down mode)
TAP_THS_Y_[4:0]	Y-axis tap recognition threshold. Default value: 0 1 LSB = FS_XL / (2^5)

9.44 TAP_THS_6D (59h)

Portrait/landscape position and tap function threshold register (R/W)

Table 124. TAP_THS_6D register

D4D_EN	SIXD_THS1	SIXD_THS0	TAP_ THS_Z_4	TAP_ THS_Z_3	TAP_ THS_Z_2	TAP_ THS_Z_1	TAP_ THS_Z_0

Table 125. TAP_THS_6D register description

D4D_EN	Enables 4D orientation detection. Z-axis position detection is disabled. Default value: 0 (0: disabled; 1: enabled)
SIXD_THS[1:0]	Threshold for 4D/6D function. Default value: 00 For details, refer to Table 126.
TAP_THS_Z_[4:0]	Z-axis recognition threshold. Default value: 0 1 LSB = FS_XL / (2^5)

Table 126. Threshold for D4D/D6D function

SIXD_THS[1:0]	Threshold value
00	80 degrees
01	70 degrees
10	60 degrees
11	50 degrees

9.45 INT_DUR2 (5Ah)

Tap recognition function setting register (R/W)

Table 127. INT_DUR2 register

DUR3	DUR2	DUR1	DUR0	QUIET1	QUIET0	SHOCK1	SHOCK0

Table 128. INT_DUR2 register description

DUR[3:0]	Duration of maximum time gap for double-tap recognition. Default: 0000 When double-tap recognition is enabled, this register expresses the maximum time between two consecutive detected taps to determine a double-tap event. The default value of these bits is 0000b which corresponds to 16/ODR_XL time. If the DUR[3:0] bits are set to a different value, 1LSB corresponds to 32/ODR_XL time.
QUIET[1:0]	Expected quiet time after a tap detection. Default value: 00 Quiet time is the time after the first detected tap in which there must not be any overthreshold event. The default value of these bits is 00b which corresponds to 2/ODR_XL time. If the QUIET[1:0] bits are set to a different value, 1LSB corresponds to 4/ODR_XL time.
SHOCK[1:0]	Maximum duration of overthreshold event. Default value: 00 Maximum duration is the maximum time of an overthreshold signal detection to be recognized as a tap event. The default value of these bits is 00b which corresponds to 4/ODR_XL time. If the SHOCK[1:0] bits are set to a different value, 1LSB corresponds to 8/ODR_XL time.

9.46 WAKE_UP_THS (5Bh)

Single/double-tap selection and wake-up configuration (R/W)

Table 129. WAKE_UP_THS register

SINGLE_ DOUBLE_TAP	USR_OFF_ ON_WU	WK_THS5	WK_THS4	WK_THS3	WK_THS2	WK_THS1	WK_THS0

Table 130. WAKE_UP_THS register description

SINGLE_DOUBLE_TAP	Enables single/double-tap event. Default: 0 (0: only single-tap event enabled; 1: both single and double-tap events enabled)
USR_OFF_ON_WU	Drives the low-pass filtered data with user offset correction (instead of high-pass filtered data) to the wake-up and the activity/inactivity functions.
WK_THS[5:0]	Threshold for wake-up: 1 LSB weight depends on WAKE_THS_W in WAKE_UP_DUR (5Ch). Default value: 000000

9.47 WAKE_UP_DUR (5Ch)

Free-fall, wake-up, and sleep mode functions duration setting register (R/W)

Table 131. WAKE_UP_DUR register

FF_DUR5	WAKE_DUR1	WAKE_DUR0	WAKE_THS_W	SLEEP_DUR3	SLEEP_DUR2	SLEEP_DUR1	SLEEP_DUR0

Table 132. WAKE_UP_DUR register description

FF_DUR5	Free-fall duration event. Default: 0 For the complete configuration of the free-fall duration, refer to FF_DUR[4:0] in FREE_FALL (5Dh) configuration. 1 LSB = 1 ODR_time
WAKE_DUR[1:0]	Wake-up duration event. Default: 00 1LSB = 1 ODR_time
WAKE_THS_W	Weight of 1 LSB of wake-up threshold. Default: 0 (0: 1 LSB = FS_XL / (2^6); 1: 1 LSB = FS_XL / (2^8))
SLEEP_DUR[3:0]	Duration to go in sleep mode. Default value: 0000 (this corresponds to 16 ODR) 1 LSB = 512 ODR

9.48 FREE_FALL (5Dh)

Free-fall function duration setting register (R/W)

Table 133. FREE_FALL register

FF_DUR4	FF_DUR3	FF_DUR2	FF_DUR1	FF_DUR0	FF_THS2	FF_THS1	FF_THS0

Table 134. FREE_FALL register description

FF_DUR[4:0]	Free-fall duration event. Default: 0 For the complete configuration of the free fall duration, refer to FF_DUR5 in the WAKE_UP_DUR (5Ch) configuration.
FF_THS[2:0]	Free-fall threshold setting. Default: 000 For details refer to Table 135.

Table 135. Threshold for free-fall function

FF_THS[2:0]	Threshold value
000	156 mg
001	219 mg
010	250 mg
011	312 mg
100	344 mg
101	406 mg
110	469 mg
111	500 mg

9.49 MD1_CFG (5Eh)

Functions routing to INT1 register (R/W)

Table 136. MD1_CFG register

INT1_SLEEP _CHANGE	INT1_ SINGLE_TAP	INT1_WU	INT1_FF	INT1_ DOUBLE_TAP	INT1_6D	INT1_ EMB_FUNC	INT1_ SHUB

Table 137. MD1_CFG register description

INT1_SLEEP_CHANGE[1]	Routing activity/inactivity recognition event to INT1. Default: 0 (0: routing activity/inactivity event to INT1 disabled; 1: routing activity/inactivity event to INT1 enabled)
INT1_SINGLE_TAP	Routing single-tap recognition event to INT1. Default: 0 (0: routing single-tap event to INT1 disabled; 1: routing single-tap event to INT1 enabled)
INT1_WU	Routing wake-up event to INT1. Default value: 0 (0: routing wake-up event to INT1 disabled; 1: routing wake-up event to INT1 enabled)
INT1_FF	Routing free-fall event to INT1. Default value: 0 (0: routing free-fall event to INT1 disabled; 1: routing free-fall event to INT1 enabled)
INT1_DOUBLE_TAP	Routing tap event to INT1. Default value: 0 (0: routing double-tap event to INT1 disabled; 1: routing double-tap event to INT1 enabled)
INT1_6D	Routing 6D event to INT1. Default value: 0 (0: routing 6D event to INT1 disabled; 1: routing 6D event to INT1 enabled)
INT1_EMB_FUNC	Routing embedded functions event to INT1. Default value: 0 (0: routing embedded functions event to INT1 disabled; 1: routing embedded functions event to INT1 enabled)
INT1_SHUB	Routing sensor hub communication concluded event to INT1. Default value: 0 (0: routing sensor hub communication concluded event to INT1 disabled; 1: routing sensor hub communication concluded event to INT1 enabled)

1. *Activity/inactivity interrupt mode (sleep change or sleep status) depends on the SLEEP_STATUS_ON_INT bit in the TAP_CFG0 (56h) register.*

9.50 MD2_CFG (5Fh)

Functions routing to INT2 register (R/W)

Table 138. MD2_CFG register

INT2_SLEEP _CHANGE	INT2_ SINGLE_TAP	INT2_WU	INT2_FF	INT2_ DOUBLE_TAP	INT2_6D	INT2_ EMB_FUNC	INT2_ TIMESTAMP

Table 139. MD2_CFG register description

INT2_SLEEP_CHANGE[1]	Routing activity/inactivity recognition event to INT2. Default: 0 (0: routing activity/inactivity event to INT2 disabled; 1: routing activity/inactivity event to INT2 enabled)
INT2_SINGLE_TAP	Single-tap recognition routing to INT2. Default: 0 (0: routing single-tap event to INT2 disabled; 1: routing single-tap event to INT2 enabled)
INT2_WU	Routing wake-up event to INT2. Default value: 0 (0: routing wake-up event to INT2 disabled; 1: routing wake-up event to INT2 enabled)
INT2_FF	Routing free-fall event to INT2. Default value: 0 (0: routing free-fall event to INT2 disabled; 1: routing free-fall event to INT2 enabled)
INT2_DOUBLE_TAP	Routing tap event to INT2. Default value: 0 (0: routing double-tap event to INT2 disabled; 1: routing double-tap event to INT2 enabled)
INT2_6D	Routing 6D event to INT2. Default value: 0 (0: routing 6D event to INT2 disabled; 1: routing 6D event to INT2 enabled)
INT2_EMB_FUNC	Routing embedded functions event to INT2. Default value: 0 (0: routing embedded functions event to INT2 disabled; 1: routing embedded functions event to INT2 enabled)
INT2_TIMESTAMP	Enables routing the alert for timestamp overflow within 6.4 ms to the INT2 pin.

1. *Activity/inactivity interrupt mode (sleep change or sleep status) depends on the SLEEP_STATUS_ON_INT bit in the TAP_CFG0 (56h) register.*

9.51 I3C_BUS_AVB (62h)

I3C_BUS_AVB register (R/W)

Table 140. I3C_BUS_AVB register

0[1]	0[1]	0[1]	I3C_Bus_Avb _Sel1	I3C_Bus_Avb _Sel0	0[1]	0[1]	PD_DIS_ INT1

1. *This bit must be set to 0 for the correct operation of the device.*

Table 141. I3C_BUS_AVB register description

PD_DIS_INT1	This bit allows disabling the INT1 pull-down. (0: Pull-down on INT1 enabled (pull-down is effectively connected only when no interrupts are routed to the INT1 pin or when the MIPI I3C^{SM} dynamic address is assigned); 1: Pull-down on INT1 disabled (pull-down not connected)
I3C_Bus_Avb_Sel[1:0]	These bits are used to select the bus available time when MIPI I3C^{SM} IBI is used. Default value: 00 (00: bus available time equal to 50 µsec (default); 01: bus available time equal to 2 µsec; 10: bus available time equal to 1 msec; 11: bus available time equal to 25 msec)

9.52 INTERNAL_FREQ_FINE (63h)

Internal frequency register (R)

Table 142. INTERNAL_FREQ_FINE register

FREQ_ FINE7	FREQ_ FINE6	FREQ_ FINE5	FREQ_ FINE4	FREQ_ FINE3	FREQ_ FINE2	FREQ_ FINE1	FREQ_ FINE0

Table 143. INTERNAL_FREQ_FINE register description

FREQ_FINE[7:0]	Difference in percentage of the effective ODR (and timestamp rate) with respect to the typical. Step: 0.15%. 8-bit format, two's complement.

9.53 INT_OIS (6Fh)

Enable OIS interrupt configuration register and accelerometer self-test setting. Primary interface for read-only (R); only the auxiliary SPI can write to this register (R/W).

Table 144. INT_OIS register

INT2_ DRDY_OIS	LVL2_OIS	DEN_LH_OIS	-	-	0[(1)]	ST1_XL_OIS	ST0_XL_OIS

1. *This bit must be set to 0 for the correct operation of the device.*

Table 145. INT_OIS register description

INT2_DRDY_OIS	Enables OIS chain DRDY on INT2 pin. This setting has priority over all other INT2 settings.
LVL2_OIS	Enables level-sensitive latched mode on the OIS chain. Default value: 0
DEN_LH_OIS	Indicates polarity of DEN signal on OIS chain (0: DEN pin is active-low; 1: DEN pin is active-high)
ST[1:0]_XL_OIS	Selects accelerometer self-test – active only if the accelerometer OIS chain is enabled. Default value: 00 (00: normal mode; 01: positive sign self-test; 10: negative sign self-test; 11: not allowed)

9.54 CTRL1_OIS (70h)

OIS configuration register. Primary interface for read-only (R); only the auxiliary SPI can write to this register (R/W).

Table 146. CTRL1_OIS register

0[1]	LVL1_OIS	SIM_OIS	Mode4_EN	FS1_G_OIS	FS0_G_OIS	FS_125_OIS	OIS_EN_SPI2

1. *This bit must be set to 0 for the correct operation of the device.*

Table 147. CTRL1_OIS register description

LVL1_OIS	Enables OIS data level-sensitive trigger
SIM_OIS	SPI2 3- or 4-wire interface. Default value: 0 (0: 4-wire SPI2; 1: 3-wire SPI2)
Mode4_EN	Enables accelerometer OIS chain. OIS outputs are available through SPI2 in registers 28h-2Dh. Note: OIS_EN_SPI2 must be enabled (that is, set to 1) to enable also the accelerometer OIS chain.
FS[1:0]_G_OIS	Selects gyroscope OIS chain full-scale (00: ±250 dps; 01: ±500 dps; 10: ±1000 dps; 11: ±2000 dps)
FS_125_OIS	Selects gyroscope OIS chain full-scale ±125 dps (0: FS selected through bits FS[1:0]_OIS_G; 1: ±125 dps)
OIS_EN_SPI2	Enables OIS chain data processing for gyroscope in mode 3 and mode 4 (Mode4_EN = 1) and accelerometer data in mode 4 (Mode4_EN = 1). When the OIS chain is enabled, the OIS outputs are available through the SPI2 in registers OUTX_L_G (22h) and OUTX_H_G (23h) through OUTZ_L_A (2Ch) and OUTZ_H_A (2Dh) and STATUS_REG (1Eh) / STATUS_SPIAux (1Eh), and LPF1 is dedicated to this chain.

DEN mode selection can be done using the LVL1_OIS bit of register CTRL1_OIS (70h) and the LVL2_OIS bit of register INT_OIS (6Fh).

DEN mode on the OIS path is active in the gyroscope only.

Table 148. DEN mode selection

LVL1_OIS, LVL2_OIS	DEN mode
10	Level-sensitive trigger mode is selected.
11	Level-sensitive latched mode is selected.

9.55 CTRL2_OIS (71h)

OIS configuration register. Primary interface for read-only (R); only the auxiliary SPI can write to this register (R/W).

Table 149. CTRL2_OIS register

-	-	HPM1_OIS	HPM0_OIS	0[1]	FTYPE_1 _OIS	FTYPE_0 _OIS	HP_EN_OIS

1. *This bit must be set to 0 for the correct operation of the device.*

Table 150. CTRL2_OIS register description

HPM[1:0]_OIS	Selects gyroscope OIS chain digital high-pass filter cutoff. Default value: 00 (00: 16 mHz; 01: 65 mHz; 10: 260 mHz; 11: 1.04 Hz)
FTYPE_[1:0]_OIS	Selects gyroscope digital LPF1 filter bandwidth. Table 151 shows cutoff and phase values obtained with all configurations.
HP_EN_OIS	Enables gyroscope OIS chain digital high-pass filter

Table 151. Gyroscope OIS chain digital LPF1 filter bandwidth selection

FTYPE_[1:0]_OIS	Cutoff [Hz]	Phase @ 20 Hz [°]
00	335.5	-6.69
01	232.0	-8.78
10	171.1	-11.18
11	609.0	-4.91

9.56 CTRL3_OIS (72h)

OIS configuration register. Primary interface for read-only (R); only the auxiliary SPI can write to this register (R/W).

Table 152. CTRL3_OIS register

FS1_XL_ OIS	FS0_XL_ OIS	FILTER_XL_ CONF_OIS_2	FILTER_XL_ CONF_OIS_1	FILTER_XL_ CONF_OIS_0	ST1_OIS	ST0_OIS	ST_OIS_ CLAMPDIS

Table 153. CTRL3_OIS register description

FS[1:0]_XL_OIS	Selects accelerometer OIS channel full-scale. See Table 154.
FILTER_XL_ CONF_OIS_[2:0]	Selects accelerometer OIS channel bandwidth. See Table 155.
ST[1:0]_OIS	Selects gyroscope OIS chain self-test. Default value: 00 Table 156 lists the output variation when the self-test is enabled and ST_OIS_CLAMPDIS = 1. (00: Normal mode; 01: Positive sign self-test; 10: Normal mode; 11: Negative sign self-test)
ST_OIS_ CLAMPDIS	Disables OIS chain clamp (0: All OIS chain outputs = 8000h during self-test; 1: OIS chain self-test outputs as shown in Table 156.

Table 154. Accelerometer OIS channel full-scale selection

FS[1:0]_XL_OIS	XL_FS_MODE = 0		XL_FS_MODE = 1
	XL UI ON	XL UI PD	-
00 (default)	Full-scale selected from user interface	±2 *g*	±2 *g*
01		±16 *g*	±2 *g*
10		±4 *g*	±4 *g*
11		±8 *g*	±8 *g*

Note: XL_FS_MODE bit is in CTRL8_XL (17h).

Note: When the accelerometer full-scale value is selected only from the UI side, it is readable also from the OIS side.

Table 155. Accelerometer OIS channel bandwidth and phase

FILTER_XL_CONF_OIS[2:0]	Typ. overall bandwidth [Hz]	Typ. overall phase [°]
000	289	-5.72 @ 20 Hz
001	258	-6.80 @ 20 Hz
010	120	-13.2 @ 20 Hz
011	65.1	-21.5 @ 20 Hz
100	33.2	-19.1 @ 10 Hz
101	16.6	-33.5 @ 10 Hz
110	8.30	-26.7 @ 4 Hz
111	4.14	-26.2 @ 2 Hz

Table 156. **Self-test nominal output variation**

Full scale	Output variation [dps]
±2000	±400
±1000	±200
±500	±100
±250	±50
±125	±25

9.57 X_OFS_USR (73h)

Accelerometer X-axis user offset correction (R/W). The offset value set in the X_OFS_USR offset register is internally subtracted from the acceleration value measured on the X-axis.

Table 157. **X_OFS_USR register**

X_OFS_USR_7	X_OFS_USR_6	X_OFS_USR_5	X_OFS_USR_4	X_OFS_USR_3	X_OFS_USR_2	X_OFS_USR_1	X_OFS_USR_0

Table 158. **X_OFS_USR register description**

X_OFS_USR_[7:0]	Accelerometer X-axis user offset correction expressed in two's complement, weight depends on USR_OFF_W in CTRL6_C (15h). The value must be in the range [-127 127].

9.58 Y_OFS_USR (74h)

Accelerometer Y-axis user offset correction (R/W). The offset value set in the Y_OFS_USR offset register is internally subtracted from the acceleration value measured on the Y-axis.

Table 159. **Y_OFS_USR register**

Y_OFS_USR_7	Y_OFS_USR_6	Y_OFS_USR_5	Y_OFS_USR_4	Y_OFS_USR_3	Y_OFS_USR_2	Y_OFS_USR_1	Y_OFS_USR_0

Table 160. **Y_OFS_USR register description**

Y_OFS_USR_[7:0]	Accelerometer Y-axis user offset calibration expressed in two's complement, weight depends on USR_OFF_W in CTRL6_C (15h). The value must be in the range [-127, +127].

9.59 Z_OFS_USR (75h)

Accelerometer Z-axis user offset correction (R/W). The offset value set in the Z_OFS_USR offset register is internally subtracted from the acceleration value measured on the Z-axis.

Table 161. Z_OFS_USR register

Z_OFS_USR_7	Z_OFS_USR_6	Z_OFS_USR_5	Z_OFS_USR_4	Z_OFS_USR_3	Z_OFS_USR_2	Z_OFS_USR_1	Z_OFS_USR_0

Table 162. Z_OFS_USR register description

Z_OFS_USR_[7:0]	Accelerometer Z-axis user offset calibration expressed in two's complement, weight depends on USR_OFF_W in CTRL6_C (15h). The value must be in the range [-127, +127].

9.60 FIFO_DATA_OUT_TAG (78h)

FIFO tag register (R)

Table 163. FIFO_DATA_OUT_TAG register

TAG_SENSOR_4	TAG_SENSOR_3	TAG_SENSOR_2	TAG_SENSOR_1	TAG_SENSOR_0	TAG_CNT_1	TAG_CNT_0	TAG_PARITY

Table 164. FIFO_DATA_OUT_TAG register description

TAG_SENSOR_[4:0]	FIFO tag: identifies the sensor in: FIFO_DATA_OUT_X_L (79h) and FIFO_DATA_OUT_X_H (7Ah), FIFO_DATA_OUT_Y_L (7Bh) and FIFO_DATA_OUT_Y_H (7Ch), and FIFO_DATA_OUT_Z_L (7Dh) and FIFO_DATA_OUT_Z_H (7Eh) For details, refer to Table 165
TAG_CNT_[1:0]	2-bit counter that identifies sensor time slot
TAG_PARITY	Parity check of TAG content

Table 165. FIFO tag

TAG_SENSOR_[4:0]	Sensor name
0x01	Gyroscope NC
0x02	Accelerometer NC
0x03	Temperature
0x04	Timestamp
0x05	CFG_Change
0x06	Accelerometer NC_T_2
0x07	Accelerometer NC_T_1
0x08	Accelerometer 2xC
0x09	Accelerometer 3xC
0x0A	Gyroscope NC_T_2
0x0B	Gyroscope NC_T_1
0x0C	Gyroscope 2xC
0x0D	Gyroscope 3xC
0x0E	Sensor Hub Slave 0
0x0F	Sensor Hub Slave 1

TAG_SENSOR_[4:0]	Sensor name
0x10	Sensor Hub Slave 2
0x11	Sensor Hub Slave 3
0x12	Step Counter
0x19	Sensor Hub Nack

9.61 FIFO_DATA_OUT_X_L (79h) and FIFO_DATA_OUT_X_H (7Ah)

FIFO data output X (R)

Table 166. FIFO_DATA_OUT_X_H and FIFO_DATA_OUT_X_L registers

D15	D14	D13	D12	D11	D10	D9	D8
D7	D6	D5	D4	D3	D2	D1	D0

Table 167. FIFO_DATA_OUT_X_H and FIFO_DATA_OUT_X_L register description

D[15:0]	FIFO X-axis output

9.62 FIFO_DATA_OUT_Y_L (7Bh) and FIFO_DATA_OUT_Y_H (7Ch)

FIFO data output Y (R)

Table 168. FIFO_DATA_OUT_Y_H and FIFO_DATA_OUT_Y_L registers

D15	D14	D13	D12	D11	D10	D9	D8
D7	D6	D5	D4	D3	D2	D1	D0

Table 169. FIFO_DATA_OUT_Y_H and FIFO_DATA_OUT_Y_L register description

D[15:0]	FIFO Y-axis output

9.63 FIFO_DATA_OUT_Z_L (7Dh) and FIFO_DATA_OUT_Z_H (7Eh)

FIFO data output Z (R)

Table 170. FIFO_DATA_OUT_Z_H and FIFO_DATA_OUT_Z_L registers

D15	D14	D13	D12	D11	D10	D9	D8
D7	D6	D5	D4	D3	D2	D1	D0

Table 171. FIFO_DATA_OUT_Z_H and FIFO_DATA_OUT_Z_L register description

D[15:0]	FIFO Z-axis output

10 Embedded functions register mapping

The table given below provides a list of the registers for the embedded functions available in the device and the corresponding addresses. Embedded functions registers are accessible when FUNC_CFG_EN is set to 1 in FUNC_CFG_ACCESS (01h).

Table 172. Register address map - embedded functions

Name	Type	Register address		Default	Comment
		Hex	Binary		
PAGE_SEL	R/W	02	00000010	00000001	
EMB_FUNC_EN_A	R/W	04	00000100	00000000	
EMB_FUNC_EN_B	R/W	05	00000101	00000000	
PAGE_ADDRESS	R/W	08	00001000	00000000	
PAGE_VALUE	R/W	09	00001001	00000000	
EMB_FUNC_INT1	R/W	0A	00001010	00000000	
FSM_INT1_A	R/W	0B	00001011	00000000	
FSM_INT1_B	R/W	0C	00001100	00000000	
EMB_FUNC_INT2	R/W	0E	00001110	00000000	
FSM_INT2_A	R/W	0F	00001111	00000000	
FSM_INT2_B	R/W	10	00010000	00000000	
EMB_FUNC_STATUS	R	12	00010010	output	
FSM_STATUS_A	R	13	00010011	output	
FSM_STATUS_B	R	14	00010100	output	
PAGE_RW	R/W	17	00010111	00000000	
RESERVED		18-43			
EMB_FUNC_FIFO_CFG	r/w	44	01000100	00000000	
FSM_ENABLE_A	R/W	46	01000110	00000000	
FSM_ENABLE_B	R/W	47	01000111	00000000	
FSM_LONG_COUNTER_L	R/W	48	01001000	00000000	
FSM_LONG_COUNTER_H	R/W	49	01001001	00000000	
FSM_LONG_COUNTER_CLEAR	R/W	4A	01001010	00000000	
FSM_OUTS1	R	4C	01001100	output	
FSM_OUTS2	R	4D	01001101	output	
FSM_OUTS3	R	4E	01001110	output	
FSM_OUTS4	R	4F	01001111	output	
FSM_OUTS5	R	50	01010000	output	
FSM_OUTS6	R	51	01010001	output	
FSM_OUTS7	R	52	01010010	output	
FSM_OUTS8	R	53	01010011	output	
FSM_OUTS9	R	54	01010100	output	
FSM_OUTS10	R	55	01010101	output	
FSM_OUTS11	R	56	01010110	output	
FSM_OUTS12	R	57	01010111	output	

Name	Type	Register address		Default	Comment
		Hex	Binary		
FSM_OUTS13	R	58	01011000	output	
FSM_OUTS14	R	59	01011001	output	
FSM_OUTS15	R	5A	01011010	output	
FSM_OUTS16	R	5B	01011011	output	
RESERVED		5E	01011110		
EMB_FUNC_ODR_CFG_B	R/W	5F	01011111	01001011	
STEP_COUNTER_L	R	62	01100010	output	
STEP_COUNTER_H	R	63	01100011	output	
EMB_FUNC_SRC	R/W	64	01100100	output	
EMB_FUNC_INIT_A	R/W	66	01100110	00000000	
EMB_FUNC_INIT_B	R/W	67	01100111	00000000	

Reserved registers must not be changed. Writing to those registers may cause permanent damage to the device.

The content of the registers that are loaded at boot should not be changed. They contain the factory calibration values. Their content is automatically restored when the device is powered up.

11 Embedded functions register description

11.1 PAGE_SEL (02h)

Enable advanced features dedicated pages (R/W)

Table 173. PAGE_SEL register

PAGE_SEL3	PAGE_SEL2	PAGE_SEL1	PAGE_SEL0	0(1)	0(1)	0(1)	1(2)

1. *This bit must be set to 0 for the correct operation of the device.*
2. *This bit must be set to 1 for the correct operation of the device.*

Table 174. PAGE_SEL register description

PAGE_SEL[3:0]	Selects the advanced features dedicated page. Default value: 0000

11.2 EMB_FUNC_EN_A (04h)

Enable embedded functions register (R/W)

Table 175. EMB_FUNC_EN_A register

0(1)	0(1)	SIGN_ MOTION_EN	TILT_EN	PEDO_EN	0(1)	0(1)	0(1)

1. *This bit must be set to 0 for the correct operation of the device.*

Table 176. EMB_FUNC_EN_A register description

SIGN_MOTION_EN	Enables significant motion detection function. Default value: 0 (0: significant motion detection function disabled; 1: significant motion detection function enabled)
TILT_EN	Enables tilt calculation. Default value: 0 (0: tilt algorithm disabled; 1: tilt algorithm enabled)
PEDO_EN	Enables pedometer algorithm. Default value: 0 (0: pedometer algorithm disabled; 1: pedometer algorithm enabled)

11.3 EMB_FUNC_EN_B (05h)

Enable embedded functions register (R/W)

Table 177. EMB_FUNC_EN_B register

0[1]	0[1]	0[1]	PEDO_ ADV_EN	FIFO_ COMPR_EN	0[1]	0[1]	FSM_EN

1. *This bit must be set to 0 for the correct operation of the device.*

Table 178. EMB_FUNC_EN_B register description

PEDO_ADV_EN	Enables pedometer false-positive rejection block and advanced detection feature block. Default value: 0 (0: pedometer advanced features block disabled; 1: pedometer advanced features block enabled)
FIFO_COMPR_EN[1]	Enables FIFO compression feature. Default value: 0 (0: FIFO compression feature disabled; 1: FIFO compression feature enabled)
FSM_EN	Enables finite state machine (FSM) feature. Default value: 0 (0: FSM feature disabled; 1: FSM feature enabled)

1. *This bit is active if the FIFO_COMPR_RT_EN bit of FIFO_CTRL2 (08h) is set to 1.*

11.4 PAGE_ADDRESS (08h)

Page address register (R/W)

Table 179. PAGE_ADDRESS register

PAGE_ ADDR7	PAGE_ ADDR6	PAGE_ ADDR5	PAGE_ ADDR4	PAGE_ ADDR3	PAGE_ ADDR2	PAGE_ ADDR1	PAGE_ ADDR0

Table 180. PAGE_ADDRESS register description

PAGE_ADDR[7:0]	After setting the bit PAGE_WRITE / PAGE_READ in register PAGE_RW (17h), this register is used to set the address of the register to be written/read in the advanced features page selected through the bits PAGE_SEL[3:0] in register PAGE_SEL (02h).

11.5 PAGE_VALUE (09h)

Page value register (R/W)

Table 181. PAGE_VALUE register

PAGE_ VALUE7	PAGE_ VALUE6	PAGE_ VALUE5	PAGE_ VALUE4	PAGE_ VALUE3	PAGE_ VALUE2	PAGE_ VALUE1	PAGE_ VALUE0

Table 182. PAGE_VALUE register description

PAGE_VALUE[7:0]	These bits are used to write (if the bit PAGE_WRITE = 1 in register PAGE_RW (17h)) or read (if the bit PAGE_READ = 1 in register PAGE_RW (17h)) the data at the address PAGE_ADDR[7:0] of the selected advanced features page.

11.6 EMB_FUNC_INT1 (0Ah)

INT1 pin control register (R/W)

Each bit in this register enables a signal to be carried over INT1. The pin's output supplies the OR combination of the selected signals.

Table 183. EMB_FUNC_INT1 register

INT1_ FSM_LC	0(1)	INT1_ SIG_MOT	INT1_TILT	INT1_STEP_ DETECTOR	0(1)	0(1)	0(1)

1. *This bit must be set to 0 for the correct operation of the device.*

Table 184. EMB_FUNC_INT1 register description

INT1_FSM_LC(1)	Routing FSM long counter timeout interrupt event to INT1. Default value: 0 (0: routing to INT1 disabled; 1: routing to INT1 enabled)
INT1_SIG_MOT(1)	Routing significant motion event to INT1. Default value: 0 (0: routing to INT1 disabled; 1: routing to INT1 enabled)
INT1_TILT(1)	Routing tilt event to INT1. Default value: 0 (0: routing to INT1 disabled; 1: routing to INT1 enabled)
INT1_STEP_DETECTOR(1)	Routing pedometer step recognition event to INT1. Default value: 0 (0: routing to INT1 disabled; 1: routing to INT1 enabled)

1. *This bit is active if the INT1_EMB_FUNC bit of MD1_CFG (5Eh) is set to 1.*

11.7 FSM_INT1_A (0Bh)

INT1 pin control register (R/W)

Each bit in this register enables a signal to be carried over INT1. The pin's output supplies the OR combination of the selected signals.

Table 185. FSM_INT1_A register

INT1_ FSM8	INT1_ FSM7	INT1_ FSM6	INT1_ FSM5	INT1_ FSM4	INT1_ FSM3	INT1_ FSM2	INT1_ FSM1

Table 186. FSM_INT1_A register description

INT1_FSM8[1]	Routing FSM8 interrupt event to INT1. Default value: 0 (0: routing to INT1 disabled; 1: routing to INT1 enabled)
INT1_FSM7[1]	Routing FSM7 interrupt event to INT1. Default value: 0 (0: routing to INT1 disabled; 1: routing to INT1 enabled)
INT1_FSM6[1]	Routing FSM6 interrupt event to INT1. Default value: 0 (0: routing to INT1 disabled; 1: routing to INT1 enabled)
INT1_FSM5[1]	Routing FSM5 interrupt event to INT1. Default value: 0 (0: routing to INT1 disabled; 1: routing to INT1 enabled)
INT1_FSM4[1]	Routing FSM4 interrupt event to INT1. Default value: 0 (0: routing to INT1 disabled; 1: routing to INT1 enabled)
INT1_FSM3[1]	Routing FSM3 interrupt event to INT1. Default value: 0 (0: routing to INT1 disabled; 1: routing to INT1 enabled)
INT1_FSM2[1]	Routing FSM2 interrupt event to INT1. Default value: 0 (0: routing to INT1 disabled; 1: routing to INT1 enabled)
INT1_FSM1[1]	Routing FSM1 interrupt event to INT1. Default value: 0 (0: routing to INT1 disabled; 1: routing to INT1 enabled)

1. *This bit is active if the INT1_EMB_FUNC bit of MD1_CFG (5Eh) is set to 1.*

11.8 FSM_INT1_B (0Ch)

INT1 pin control register (R/W)

Each bit in this register enables a signal to be carried over INT1. The pin's output supplies the OR combination of the selected signals.

Table 187. FSM_INT1_B register

INT1_ FSM16	INT1_ FSM15	INT1_ FSM14	INT1_ FSM13	INT1_ FSM12	INT1_ FSM11	INT1_ FSM10	INT1_ FSM9

Table 188. FSM_INT1_B register description

INT1_FSM16[1]	Routing FSM16 interrupt event to INT1. Default value: 0 (0: routing to INT1 disabled; 1: routing to INT1 enabled)
INT1_FSM15[1]	Routing FSM15 interrupt event to INT1. Default value: 0 (0: routing to INT1 disabled; 1: routing to INT1 enabled)
INT1_FSM14[1]	Routing FSM14 interrupt event to INT1. Default value: 0 (0: routing to INT1 disabled; 1: routing to INT1 enabled)
INT1_FSM13[1]	Routing FSM13 interrupt event to INT1. Default value: 0 (0: routing to INT1 disabled; 1: routing to INT1 enabled)
INT1_FSM12[1]	Routing FSM12 interrupt event to INT1. Default value: 0 (0: routing to INT1 disabled; 1: routing to INT1 enabled)
INT1_FSM11[1]	Routing FSM11 interrupt event to INT1. Default value: 0 (0: routing to INT1 disabled; 1: routing to INT1 enabled)
INT1_FSM10[1]	Routing FSM10 interrupt event to INT1. Default value: 0 (0: routing to INT1 disabled; 1: routing to INT1 enabled)
INT1_FSM9[1]	Routing FSM9 interrupt event to INT1. Default value: 0 (0: routing to INT1 disabled; 1: routing to INT1 enabled)

1. *This bit is active if the INT1_EMB_FUNC bit of MD1_CFG (5Eh) is set to 1.*

11.9 EMB_FUNC_INT2 (0Eh)

INT2 pin control register (R/W)

Each bit in this register enables a signal to be carried over INT2. The pin's output supplies the OR combination of the selected signals.

Table 189. EMB_FUNC_INT2 register

INT2_ FSM_LC	0[1]	INT2_ SIG_MOT	INT2_TILT	INT2_STEP_ DETECTOR	0[1]	0[1]	0[1]

1. *This bit must be set to 0 for the correct operation of the device.*

Table 190. EMB_FUNC_INT2 register description

INT2_FSM_LC[1]	Routing FSM long counter timeout interrupt event to INT2. Default value: 0 (0: routing to INT2 disabled; 1: routing to INT2 enabled)
INT2_SIG_MOT[1]	Routing significant motion event to INT2. Default value: 0 (0: routing to INT2 disabled; 1: routing to INT2 enabled)
INT2_TILT[1]	Routing tilt event to INT2. Default value: 0 (0: routing to INT2 disabled; 1: routing to INT2 enabled)
INT2_STEP_DETECTOR[1]	Routing pedometer step recognition event to INT2. Default value: 0 (0: routing to INT2 disabled; 1: routing to INT2 enabled)

1. *This bit is active if the INT2_EMB_FUNC bit of MD2_CFG (5Fh) is set to 1.*

11.10 FSM_INT2_A (0Fh)

INT2 pin control register (R/W)

Each bit in this register enables a signal to be carried over INT2. The pin's output supplies the OR combination of the selected signals.

Table 191. FSM_INT2_A register

INT2_ FSM8	INT2_ FSM7	INT2_ FSM6	INT2_ FSM5	INT2_ FSM4	INT2_ FSM3	INT2_ FSM2	INT2_ FSM1

Table 192. FSM_INT2_A register description

INT2_FSM8[1]	Routing FSM8 interrupt event to INT2. Default value: 0 (0: routing to INT2 disabled; 1: routing to INT2 enabled)
INT2_FSM7[1]	Routing FSM7 interrupt event to INT2. Default value: 0 (0: routing to INT2 disabled; 1: routing to INT2 enabled)
INT2_FSM6[1]	Routing FSM6 interrupt event to INT2. Default value: 0 (0: routing to INT2 disabled; 1: routing to INT2 enabled)
INT2_FSM5[1]	Routing FSM5 interrupt event to INT2. Default value: 0 (0: routing to INT2 disabled; 1: routing to INT2 enabled)
INT2_FSM4[1]	Routing FSM4 interrupt event to INT2. Default value: 0 (0: routing to INT2 disabled; 1: routing to INT2 enabled)
INT2_FSM3[1]	Routing FSM3 interrupt event to INT2. Default value: 0 (0: routing to INT2 disabled; 1: routing to INT2 enabled)
INT2_FSM2[1]	Routing FSM2 interrupt event to INT2. Default value: 0 (0: routing to INT2 disabled; 1: routing to INT2 enabled)
INT2_FSM1[1]	Routing FSM1 interrupt event to INT2. Default value: 0 (0: routing to INT2 disabled; 1: routing to INT2 enabled)

1. *This bit is active if the INT2_EMB_FUNC bit of MD2_CFG (5Fh) is set to 1.*

11.11 FSM_INT2_B (10h)

INT2 pin control register (R/W)

Each bit in this register enables a signal to be carried over INT2. The pin's output supplies the OR combination of the selected signals.

Table 193. FSM_INT2_B register

INT2_ FSM16	INT2_ FSM15	INT2_ FSM14	INT2_ FSM13	INT2_ FSM12	INT2_ FSM11	INT2_ FSM10	INT2_ FSM9

Table 194. FSM_INT2_B register description

INT2_FSM16[1]	Routing FSM16 interrupt event to INT2. Default value: 0 (0: routing to INT2 disabled; 1: routing to INT2 enabled)
INT2_FSM15[1]	Routing FSM15 interrupt event to INT2. Default value: 0 (0: routing to INT2 disabled; 1: routing to INT2 enabled)
INT2_FSM14[1]	Routing FSM14 interrupt event to INT2. Default value: 0 (0: routing to INT2 disabled; 1: routing to INT2 enabled)
INT2_FSM13[1]	Routing FSM13 interrupt event to INT2. Default value: 0 (0: routing to INT2 disabled; 1: routing on INT2 enabled)
INT2_FSM12[1]	Routing FSM12 interrupt event to INT2. Default value: 0 (0: routing to INT2 disabled; 1: routing to INT2 enabled)
INT2_FSM11[1]	Routing FSM11 interrupt event to INT2. Default value: 0 (0: routing to INT2 disabled; 1: routing to INT2 enabled)
INT2_FSM10[1]	Routing FSM10 interrupt event to INT2. Default value: 0 (0: routing to INT2 disabled; 1: routing to INT2 enabled)
INT2_FSM9[1]	Routing FSM9 interrupt event to INT2. Default value: 0 (0: routing to INT2 disabled; 1: routing to INT2 enabled)

1. *This bit is active if the INT2_EMB_FUNC bit of MD2_CFG (5Fh) is set to 1.*

11.12 EMB_FUNC_STATUS (12h)

Embedded function status register (R)

Table 195. EMB_FUNC_STATUS register

IS_ FSM_LC	0	IS_ SIGMOT	IS_ TILT	IS_ STEP_DET	0	0	0

Table 196. EMB_FUNC_STATUS register description

IS_FSM_LC	Interrupt status bit for FSM long counter timeout interrupt event (1: interrupt detected; 0: no interrupt)
IS_SIGMOT	Interrupt status bit for significant motion detection (1: interrupt detected; 0: no interrupt)
IS_TILT	Interrupt status bit for tilt detection (1: interrupt detected; 0: no interrupt)
IS_STEP_DET	Interrupt status bit for step detection (1: interrupt detected; 0: no interrupt)

11.13 FSM_STATUS_A (13h)

Finite state machine status register (R)

Table 197. FSM_STATUS_A register

IS_FSM8	IS_FSM7	IS_FSM6	IS_FSM5	IS_FSM4	IS_FSM3	IS_FSM2	IS_FSM1

Table 198. FSM_STATUS_A register description

IS_FSM8	Interrupt status bit for FSM8 interrupt event. (1: interrupt detected; 0: no interrupt)
IS_FSM7	Interrupt status bit for FSM7 interrupt event. (1: interrupt detected; 0: no interrupt)
IS_FSM6	Interrupt status bit for FSM6 interrupt event. (1: interrupt detected; 0: no interrupt)
IS_FSM5	Interrupt status bit for FSM5 interrupt event. (1: interrupt detected; 0: no interrupt)
IS_FSM4	Interrupt status bit for FSM4 interrupt event. (1: interrupt detected; 0: no interrupt)
IS_FSM3	Interrupt status bit for FSM3 interrupt event. (1: interrupt detected; 0: no interrupt)
IS_FSM2	Interrupt status bit for FSM2 interrupt event. (1: interrupt detected; 0: no interrupt)
IS_FSM1	Interrupt status bit for FSM1 interrupt event. (1: interrupt detected; 0: no interrupt)

11.14 FSM_STATUS_B (14h)

Finite state machine status register (R)

Table 199. FSM_STATUS_B register

IS_FSM16	IS_FSM15	IS_FSM14	IS_FSM13	IS_FSM12	IS_FSM11	IS_FSM10	IS_FSM9

Table 200. FSM_STATUS_B register description

IS_FSM16	Interrupt status bit for FSM16 interrupt event. (1: interrupt detected; 0: no interrupt)
IS_FSM15	Interrupt status bit for FSM15 interrupt event. (1: interrupt detected; 0: no interrupt)
IS_FSM14	Interrupt status bit for FSM14 interrupt event. (1: interrupt detected; 0: no interrupt)
IS_FSM13	Interrupt status bit for FSM13 interrupt event. (1: interrupt detected; 0: no interrupt)
IS_FSM12	Interrupt status bit for FSM12 interrupt event. (1: interrupt detected; 0: no interrupt)
IS_FSM11	Interrupt status bit for FSM11 interrupt event. (1: interrupt detected; 0: no interrupt)
IS_FSM10	Interrupt status bit for FSM10 interrupt event. (1: interrupt detected; 0: no interrupt)
IS_FSM9	Interrupt status bit for FSM9 interrupt event. (1: interrupt detected; 0: no interrupt)

11.15 PAGE_RW (17h)

Enable read and write mode of advanced features dedicated page (R/W)

Table 201. PAGE_RW register

EMB_ FUNC_LIR	PAGE_ WRITE	PAGE_ READ	0[1]	0[1]	0[1]	0[1]	0[1]

1. *This bit must be set to 0 for the correct operation of the device.*

Table 202. PAGE_RW register description

EMB_FUNC_LIR	Latched interrupt mode for embedded functions. Default value: 0 (0: embedded functions interrupt request not latched; 1: embedded functions interrupt request latched)
PAGE_WRITE	Enables writes to the selected advanced features dedicated page. [1] Default value: 0 (1: enable; 0: disable)
PAGE_READ	Enables reads from the selected advanced features dedicated page.[1] Default value: 0 (1: enable; 0: disable)

1. *Page selected by PAGE_SEL[3:0] in PAGE_SEL (02h) register.*

11.16 EMB_FUNC_FIFO_CFG (44h)

Embedded functions batching configuration register (R/W)

Table 203. EMB_FUNC_FIFO_CFG register

0[1]	PEDO_ FIFO_EN	0[1]	0[1]	0[1]	0[1]	0[1]	0[1]

1. *This bit must be set to 0 for the correct operation of the device.*

Table 204. EMB_FUNC_FIFO_CFG register description

PEDO_FIFO_EN	Enables FIFO batching of step counter values. Default value: 0

11.17 FSM_ENABLE_A (46h)

Enable FSM register (R/W)

Table 205. FSM_ENABLE_A register

FSM8_EN	FSM7_EN	FSM6_EN	FSM5_EN	FSM4_EN	FSM3_EN	FSM2_EN	FSM1_EN

Table 206. FSM_ENABLE_A register description

FSM8_EN	Enables FSM8. Default value: 0 (0: FSM8 disabled; 1: FSM8 enabled)
FSM7_EN	Enables FSM7. Default value: 0 (0: FSM7 disabled; 1: FSM7 enabled)
FSM6_EN	Enables FSM6. Default value: 0 (0: FSM6 disabled; 1: FSM6 enabled)
FSM5_EN	Enables FSM5. Default value: 0 (0: FSM5 disabled; 1: FSM5 enabled)
FSM4_EN	Enables FSM4. Default value: 0 (0: FSM4 disabled; 1: FSM4 enabled)
FSM3_EN	Enables FSM3. Default value: 0 (0: FSM3 disabled; 1: FSM3 enabled)
FSM2_EN	Enables FSM2. Default value: 0 (0: FSM2 disabled; 1: FSM2 enabled)
FSM1_EN	Enables FSM1. Default value: 0 (0: FSM1 disabled; 1: FSM1 enabled)

11.18 FSM_ENABLE_B (47h)

Enable FSM register (R/W)

Table 207. FSM_ENABLE_B register

FSM16_EN	FSM15_EN	FSM14_EN	FSM13_EN	FSM12_EN	FSM11_EN	FSM10_EN	FSM9_EN

Table 208. FSM_ENABLE_B register description

FSM16_EN	Enables FSM16. Default value: 0 (0: FSM16 disabled; 1: FSM16 enabled)
FSM15_EN	Enables FSM15. Default value: 0 (0: FSM15 disabled; 1: FSM15 enabled)
FSM14_EN	Enables FSM14. Default value: 0 (0: FSM14 disabled; 1: FSM14 enabled)
FSM13_EN	Enables FSM13. Default value: 0 (0: FSM13 disabled; 1: FSM13 enabled)
FSM12_EN	Enables FSM12. Default value: 0 (0: FSM12 disabled; 1: FSM12 enabled)
FSM11_EN	Enables FSM11. Default value: 0 (0: FSM11 disabled; 1: FSM11 enabled)
FSM10_EN	Enables FSM10. Default value: 0 (0: FSM10 disabled; 1: FSM10 enabled)
FSM9_EN	Enables FSM9. Default value: 0 (0: FSM9 disabled; 1: FSM9 enabled)

11.19 FSM_LONG_COUNTER_L (48h) and FSM_LONG_COUNTER_H (49h)

FSM long counter status register (R/W)

The long counter value is an unsigned integer value (16-bit format); this value can be reset using the LC_CLEAR bit in the FSM_LONG_COUNTER_CLEAR (4Ah) register.

Table 209. FSM_LONG_COUNTER_L register

FSM_LC_7	FSM_LC_6	FSM_LC_5	FSM_LC_4	FSM_LC_3	FSM_LC_2	FSM_LC_1	FSM_LC_0

Table 210. FSM_LONG_COUNTER_L register description

FSM_LC_[7:0]	Long counter current value (LSbyte). Default value: 00000000

Table 211. FSM_LONG_COUNTER_H register

FSM_LC_15	FSM_LC_14	FSM_LC_13	FSM_LC_12	FSM_LC_11	FSM_LC_10	FSM_LC_9	FSM_LC_8

Table 212. FSM_LONG_COUNTER_H register description

FSM_LC_[15:8]	Long counter current value (MSbyte). Default value: 00000000

11.20 FSM_LONG_COUNTER_CLEAR (4Ah)

FSM long counter reset register (R/W)

Table 213. FSM_LONG_COUNTER_CLEAR register

0[1]	0[1]	0[1]	0[1]	0[1]	0[1]	FSM_LC_ CLEARED	FSM_LC_ CLEAR

1. *This bit must be set to 0 for the correct operation of the device.*

Table 214. FSM_LONG_COUNTER_CLEAR register description

FSM_LC_CLEARED	This read-only bit is automatically set to 1 when the long counter reset is done. Default value: 0
FSM_LC_CLEAR	Clears FSM long counter value. Default value: 0

11.21 FSM_OUTS1 (4Ch)

FSM1 output register (R)

Table 215. FSM_OUTS1 register

P_X	N_X	P_Y	N_Y	P_Z	N_Z	P_V	N_V

Table 216. FSM_OUTS1 register description

P_X	FSM1 output: positive event detected on the X-axis. (0: event not detected; 1: event detected)
N_X	FSM1 output: negative event detected on the X-axis. (0: event not detected; 1: event detected)
P_Y	FSM1 output: positive event detected on the Y-axis. (0: event not detected; 1: event detected)
N_Y	FSM1 output: negative event detected on the Y-axis. (0: event not detected; 1: event detected)
P_Z	FSM1 output: positive event detected on the Z-axis. (0: event not detected; 1: event detected)
N_Z	FSM1 output: negative event detected on the Z-axis. (0: event not detected; 1: event detected)
P_V	FSM1 output: positive event detected on the vector. (0: event not detected; 1: event detected)
N_V	FSM1 output: negative event detected on the vector. (0: event not detected; 1: event detected)

11.22 FSM_OUTS2 (4Dh)

FSM2 output register (R)

Table 217. FSM_OUTS2 register

P_X	N_X	P_Y	N_Y	P_Z	N_Z	P_V	N_V

Table 218. FSM_OUTS2 register description

P_X	FSM2 output: positive event detected on the X-axis. (0: event not detected; 1: event detected)
N_X	FSM2 output: negative event detected on the X-axis. (0: event not detected; 1: event detected)
P_Y	FSM2 output: positive event detected on the Y-axis. (0: event not detected; 1: event detected)
N_Y	FSM2 output: negative event detected on the Y-axis. (0: event not detected; 1: event detected)
P_Z	FSM2 output: positive event detected on the Z-axis. (0: event not detected; 1: event detected)
N_Z	FSM2 output: negative event detected on the Z-axis. (0: event not detected; 1: event detected)
P_V	FSM2 output: positive event detected on the vector. (0: event not detected; 1: event detected)
N_V	FSM2 output: negative event detected on the vector. (0: event not detected; 1: event detected)

11.23 FSM_OUTS3 (4Eh)

FSM3 output register (R)

Table 219. FSM_OUTS3 register

P_X	N_X	P_Y	N_Y	P_Z	N_Z	P_V	N_V

Table 220. FSM_OUTS3 register description

P_X	FSM3 output: positive event detected on the X-axis. (0: event not detected; 1: event detected)
N_X	FSM3 output: negative event detected on the X-axis. (0: event not detected; 1: event detected)
P_Y	FSM3 output: positive event detected on the Y-axis. (0: event not detected; 1: event detected)
N_Y	FSM3 output: negative event detected on the Y-axis. (0: event not detected; 1: event detected)
P_Z	FSM3 output: positive event detected on the Z-axis. (0: event not detected; 1: event detected)
N_Z	FSM3 output: negative event detected on the Z-axis. (0: event not detected; 1: event detected)
P_V	FSM3 output: positive event detected on the vector. (0: event not detected; 1: event detected)
N_V	FSM3 output: negative event detected on the vector. (0: event not detected; 1: event detected)

11.24 FSM_OUTS4 (4Fh)

FSM4 output register (R)

Table 221. FSM_OUTS4 register

P_X	N_X	P_Y	N_Y	P_Z	N_Z	P_V	N_V

Table 222. FSM_OUTS4 register description

P_X	FSM4 output: positive event detected on the X-axis. (0: event not detected; 1: event detected)
N_X	FSM4 output: negative event detected on the X-axis. (0: event not detected; 1: event detected)
P_Y	FSM4 output: positive event detected on the Y-axis. (0: event not detected; 1: event detected)
N_Y	FSM4 output: negative event detected on the Y-axis. (0: event not detected; 1: event detected)
P_Z	FSM4 output: positive event detected on the Z-axis. (0: event not detected; 1: event detected)
N_Z	FSM4 output: negative event detected on the Z-axis. (0: event not detected; 1: event detected)
P_V	FSM4 output: positive event detected on the vector. (0: event not detected; 1: event detected)
N_V	FSM4 output: negative event detected on the vector. (0: event not detected; 1: event detected)

11.25 FSM_OUTS5 (50h)

FSM5 output register (R)

Table 223. FSM_OUTS5 register

P_X	N_X	P_Y	N_Y	P_Z	N_Z	P_V	N_V

Table 224. FSM_OUTS5 register description

P_X	FSM5 output: positive event detected on the X-axis. (0: event not detected; 1: event detected)
N_X	FSM5 output: negative event detected on the X-axis. (0: event not detected; 1: event detected)
P_Y	FSM5 output: positive event detected on the Y-axis. (0: event not detected; 1: event detected)
N_Y	FSM5 output: negative event detected on the Y-axis. (0: event not detected; 1: event detected)
P_Z	FSM5 output: positive event detected on the Z-axis. (0: event not detected; 1: event detected)
N_Z	FSM5 output: negative event detected on the Z-axis. (0: event not detected; 1: event detected)
P_V	FSM5 output: positive event detected on the vector. (0: event not detected; 1: event detected)
N_V	FSM5 output: negative event detected on the vector. (0: event not detected; 1: event detected)

11.26 FSM_OUTS6 (51h)

FSM6 output register (R)

Table 225. FSM_OUTS6 register

P_X	N_X	P_Y	N_Y	P_Z	N_Z	P_V	N_V

Table 226. FSM_OUTS6 register description

P_X	FSM6 output: positive event detected on the X-axis. (0: event not detected; 1: event detected)
N_X	FSM6 output: negative event detected on the X-axis. (0: event not detected; 1: event detected)
P_Y	FSM6 output: positive event detected on the Y-axis. (0: event not detected; 1: event detected)
N_Y	FSM6 output: negative event detected on the Y-axis. (0: event not detected; 1: event detected)
P_Z	FSM6 output: positive event detected on the Z-axis. (0: event not detected; 1: event detected)
N_Z	FSM6 output: negative event detected on the Z-axis. (0: event not detected; 1: event detected)
P_V	FSM6 output: positive event detected on the vector. (0: event not detected; 1: event detected)
N_V	FSM6 output: negative event detected on the vector. (0: event not detected; 1: event detected)

11.27 FSM_OUTS7 (52h)

FSM7 output register (R)

Table 227. FSM_OUTS7 register

P_X	N_X	P_Y	N_Y	P_Z	N_Z	P_V	N_V

Table 228. FSM_OUTS7 register description

P_X	FSM7 output: positive event detected on the X-axis. (0: event not detected; 1: event detected)
N_X	FSM7 output: negative event detected on the X-axis. (0: event not detected; 1: event detected)
P_Y	FSM7 output: positive event detected on the Y-axis. (0: event not detected; 1: event detected)
N_Y	FSM7 output: negative event detected on the Y-axis. (0: event not detected; 1: event detected)
P_Z	FSM7 output: positive event detected on the Z-axis. (0: event not detected; 1: event detected)
N_Z	FSM7 output: negative event detected on the Z-axis. (0: event not detected; 1: event detected)
P_V	FSM7 output: positive event detected on the vector. (0: event not detected; 1: event detected)
N_V	FSM7 output: negative event detected on the vector. (0: event not detected; 1: event detected)

11.28 FSM_OUTS8 (53h)

FSM8 output register (R)

Table 229. FSM_OUTS8 register

P_X	N_X	P_Y	N_Y	P_Z	N_Z	P_V	N_V

Table 230. FSM_OUTS8 register description

P_X	FSM8 output: positive event detected on the X-axis. (0: event not detected; 1: event detected)
N_X	FSM8 output: negative event detected on the X-axis. (0: event not detected; 1: event detected)
P_Y	FSM8 output: positive event detected on the Y-axis. (0: event not detected; 1: event detected)
N_Y	FSM8 output: negative event detected on the Y-axis. (0: event not detected; 1: event detected)
P_Z	FSM8 output: positive event detected on the Z-axis. (0: event not detected; 1: event detected)
N_Z	FSM8 output: negative event detected on the Z-axis. (0: event not detected; 1: event detected)
P_V	FSM8 output: positive event detected on the vector. (0: event not detected; 1: event detected)
N_V	FSM8 output: negative event detected on the vector. (0: event not detected; 1: event detected)

11.29 FSM_OUTS9 (54h)

FSM9 output register (R)

Table 231. FSM_OUTS9 register

P_X	N_X	P_Y	N_Y	P_Z	N_Z	P_V	N_V

Table 232. FSM_OUTS9 register description

P_X	FSM9 output: positive event detected on the X-axis. (0: event not detected; 1: event detected)
N_X	FSM9 output: negative event detected on the X-axis. (0: event not detected; 1: event detected)
P_Y	FSM9 output: positive event detected on the Y-axis. (0: event not detected; 1: event detected)
N_Y	FSM9 output: negative event detected on the Y-axis. (0: event not detected; 1: event detected)
P_Z	FSM9 output: positive event detected on the Z-axis. (0: event not detected; 1: event detected)
N_Z	FSM9 output: negative event detected on the Z-axis. (0: event not detected; 1: event detected)
P_V	FSM9 output: positive event detected on the vector. (0: event not detected; 1: event detected)
N_V	FSM9 output: negative event detected on the vector. (0: event not detected; 1: event detected)

11.30 FSM_OUTS10 (55h)

FSM10 output register (R)

Table 233. FSM_OUTS10 register

P_X	N_X	P_Y	N_Y	P_Z	N_Z	P_V	N_V

Table 234. FSM_OUTS10 register description

P_X	FSM10 output: positive event detected on the X-axis. (0: event not detected; 1: event detected)
N_X	FSM10 output: negative event detected on the X-axis. (0: event not detected; 1: event detected)
P_Y	FSM10 output: positive event detected on the Y-axis. (0: event not detected; 1: event detected)
N_Y	FSM10 output: negative event detected on the Y-axis. (0: event not detected; 1: event detected)
P_Z	FSM10 output: positive event detected on the Z-axis. (0: event not detected; 1: event detected)
N_Z	FSM10 output: negative event detected on the Z-axis. (0: event not detected; 1: event detected)
P_V	FSM10 output: positive event detected on the vector. (0: event not detected; 1: event detected)
N_V	FSM10 output: negative event detected on the vector. (0: event not detected; 1: event detected)

11.31 FSM_OUTS11 (56h)

FSM11 output register (R)

Table 235. FSM_OUTS11 register

P_X	N_X	P_Y	N_Y	P_Z	N_Z	P_V	N_V

Table 236. FSM_OUTS11 register description

P_X	FSM11 output: positive event detected on the X-axis. (0: event not detected; 1: event detected)
N_X	FSM11 output: negative event detected on the X-axis. (0: event not detected; 1: event detected)
P_Y	FSM11 output: positive event detected on the Y-axis. (0: event not detected; 1: event detected)
N_Y	FSM11 output: negative event detected on the Y-axis. (0: event not detected; 1: event detected)
P_Z	FSM11 output: positive event detected on the Z-axis. (0: event not detected; 1: event detected)
N_Z	FSM11 output: negative event detected on the Z-axis. (0: event not detected; 1: event detected)
P_V	FSM11 output: positive event detected on the vector. (0: event not detected; 1: event detected)
N_V	FSM11 output: negative event detected on the vector. (0: event not detected; 1: event detected)

11.32 FSM_OUTS12 (57h)

FSM12 output register (R)

Table 237. FSM_OUTS12 register

P_X	N_X	P_Y	N_Y	P_Z	N_Z	P_V	N_V

Table 238. FSM_OUTS12 register description

P_X	FSM12 output: positive event detected on the X-axis. (0: event not detected; 1: event detected)
N_X	FSM12 output: negative event detected on the X-axis. (0: event not detected; 1: event detected)
P_Y	FSM12 output: positive event detected on the Y-axis. (0: event not detected; 1: event detected)
N_Y	FSM12 output: negative event detected on the Y-axis. (0: event not detected; 1: event detected)
P_Z	FSM12 output: positive event detected on the Z-axis. (0: event not detected; 1: event detected)
N_Z	FSM12 output: negative event detected on the Z-axis. (0: event not detected; 1: event detected)
P_V	FSM12 output: positive event detected on the vector. (0: event not detected; 1: event detected)
N_V	FSM12 output: negative event detected on the vector. (0: event not detected; 1: event detected)

11.33 FSM_OUTS13 (58h)

FSM13 output register (R)

Table 239. FSM_OUTS13 register

P_X	N_X	P_Y	N_Y	P_Z	N_Z	P_V	N_V

Table 240. FSM_OUTS13 register description

P_X	FSM13 output: positive event detected on the X-axis. (0: event not detected; 1: event detected)
N_X	FSM13 output: negative event detected on the X-axis. (0: event not detected; 1: event detected)
P_Y	FSM13 output: positive event detected on the Y-axis. (0: event not detected; 1: event detected)
N_Y	FSM13 output: negative event detected on the Y-axis. (0: event not detected; 1: event detected)
P_Z	FSM13 output: positive event detected on the Z-axis. (0: event not detected; 1: event detected)
N_Z	FSM13 output: negative event detected on the Z-axis. (0: event not detected; 1: event detected)
P_V	FSM13 output: positive event detected on the vector. (0: event not detected; 1: event detected)
N_V	FSM13 output: negative event detected on the vector. (0: event not detected; 1: event detected)

11.34 FSM_OUTS14 (59h)

FSM14 output register (R)

Table 241. FSM_OUTS14 register

P_X	N_X	P_Y	N_Y	P_Z	N_Z	P_V	N_V

Table 242. FSM_OUTS14 register description

P_X	FSM14 output: positive event detected on the X-axis. (0: event not detected; 1: event detected)
N_X	FSM14 output: negative event detected on the X-axis. (0: event not detected; 1: event detected)
P_Y	FSM14 output: positive event detected on the Y-axis. (0: event not detected; 1: event detected)
N_Y	FSM14 output: negative event detected on the Y-axis. (0: event not detected; 1: event detected)
P_Z	FSM14 output: positive event detected on the Z-axis. (0: event not detected; 1: event detected)
N_Z	FSM14 output: negative event detected on the Z-axis. (0: event not detected; 1: event detected)
P_V	FSM14 output: positive event detected on the vector. (0: event not detected; 1: event detected)
N_V	FSM14 output: negative event detected on the vector. (0: event not detected; 1: event detected)

11.35 FSM_OUTS15 (5Ah)

FSM15 output register (R)

Table 243. FSM_OUTS15 register

P_X	N_X	P_Y	N_Y	P_Z	N_Z	P_V	N_V

Table 244. FSM_OUTS15 register description

P_X	FSM15 output: positive event detected on the X-axis. (0: event not detected; 1: event detected)
N_X	FSM15 output: negative event detected on the X-axis. (0: event not detected; 1: event detected)
P_Y	FSM15 output: positive event detected on the Y-axis. (0: event not detected; 1: event detected)
N_Y	FSM15 output: negative event detected on the Y-axis. (0: event not detected; 1: event detected)
P_Z	FSM15 output: positive event detected on the Z-axis. (0: event not detected; 1: event detected)
N_Z	FSM15 output: negative event detected on the Z-axis. (0: event not detected; 1: event detected)
P_V	FSM15 output: positive event detected on the vector. (0: event not detected; 1: event detected)
N_V	FSM15 output: negative event detected on the vector. (0: event not detected; 1: event detected)

11.36 FSM_OUTS16 (5Bh)

FSM16 output register (R)

Table 245. FSM_OUTS16 register

P_X	N_X	P_Y	N_Y	P_Z	N_Z	P_V	N_V

Table 246. FSM_OUTS16 register description

P_X	FSM16 output: positive event detected on the X-axis. (0: event not detected; 1: event detected)
N_X	FSM16 output: negative event detected on the X-axis. (0: event not detected; 1: event detected)
P_Y	FSM16 output: positive event detected on the Y-axis. (0: event not detected; 1: event detected)
N_Y	FSM16 output: negative event detected on the Y-axis. (0: event not detected; 1: event detected)
P_Z	FSM16 output: positive event detected on the Z-axis. (0: event not detected; 1: event detected)
N_Z	FSM16 output: negative event detected on the Z-axis. (0: event not detected; 1: event detected)
P_V	FSM16 output: positive event detected on the vector. (0: event not detected; 1: event detected)
N_V	FSM16 output: negative event detected on the vector. (0: event not detected; 1: event detected)

11.37 EMB_FUNC_ODR_CFG_B (5Fh)

Finite state machine output data rate configuration register (R/W)

Table 247. EMB_FUNC_ODR_CFG_B register

0[1]	1[2]	0[1]	FSM_ODR1	FSM_ODR0	0[1]	1[2]	1[2]

1. *This bit must be set to 0 for the correct operation of the device.*
2. *This bit must be set to 1 for the correct operation of the device.*

Table 248. EMB_FUNC_ODR_CFG_B register description

FSM_ODR[1:0]	Finite state machine ODR configuration: (00: 12.5 Hz; 01: 26 Hz (default); 10: 52 Hz; 11: 104 Hz)

11.38 STEP_COUNTER_L (62h) and STEP_COUNTER_H (63h)

Step counter output register (R)

Table 249. STEP_COUNTER_L register

STEP_7	STEP_6	STEP_5	STEP_4	STEP_3	STEP_2	STEP_1	STEP_0

Table 250. STEP_COUNTER_L register description

STEP_[7:0]	Step counter output (LSbyte)

Table 251. STEP_COUNTER_H register

STEP_15	STEP_14	STEP_13	STEP_12	STEP_11	STEP_10	STEP_9	STEP_8

Table 252. STEP_COUNTER_H register description

STEP_[15:8]	Step counter output (MSbyte)

11.39 EMB_FUNC_SRC (64h)

Embedded function source register (R/W)

Table 253. EMB_FUNC_SRC register

PEDO_RST _STEP	0	STEP_ DETECTED	STEP_COUNT _DELTA_IA	STEP_ OVERFLOW	STEPCOUNTER _BIT_SET	0	0

Table 254. EMB_FUNC_SRC register description

PEDO_RST_STEP	Resets pedometer step counter. Read/write bit. (0: disabled; 1: enabled)
STEP_DETECTED	Step detector event detection status. Read-only bit. (0: step detection event not detected; 1: step detection event detected)
STEP_COUNT_DELTA_IA	Pedometer step recognition during delta time status. Read-only bit. (0: no step recognized during delta time; 1: at least one step recognized during delta time)
STEP_OVERFLOW	Step counter overflow status. Read-only bit. (0: step counter value < 2^{16}; 1: step counter value reached 2^{16})
STEPCOUNTER_BIT_SET	This bit is equal to 1 when the step count is increased. If a timer period is programmed in PEDO_SC_DELTAT_L (D0h) & PEDO_SC_DELTAT_H (D1h) embedded advanced features (page 1) registers, this bit is kept to 0. Read-only bit.

11.40 EMB_FUNC_INIT_A (66h)

Embedded functions initialization register (R/W)

Table 255. EMB_FUNC_INIT_A register

0(1)	0(1)	SIG_MOT _INIT	TILT _INIT	STEP_DET _INIT	0(1)	0(1)	0(1)

1. *This bit must be set to 0 for the correct operation of the device.*

Table 256. EMB_FUNC_INIT_A register description

SIG_MOT_INIT	Significant motion detection algorithm initialization request. Default value: 0
TILT_INIT	Tilt algorithm initialization request. Default value: 0
STEP_DET_INIT	Pedometer step counter/detector algorithm initialization request. Default value: 0

11.41 EMB_FUNC_INIT_B (67h)

Embedded functions initialization register (R/W)

Table 257. EMB_FUNC_INIT_B register

0[1]	0[1]	0[1]	0[1]	FIFO_ COMPR_INIT	0[1]	0[1]	FSM_INIT

1. *This bit must be set to 0 for the correct operation of the device.*

Table 258. EMB_FUNC_INIT_B register description

FIFO_COMPR_INIT	FIFO compression feature initialization request. Default value: 0
FSM_INIT	FSM initialization request. Default value: 0

12 Embedded advanced features pages

The table given below provides a list of the registers for the embedded advanced features page 0. These registers are accessible when PAGE_SEL[3:0] are set to 0000 in PAGE_SEL (02h).

Table 259. Register address map - embedded advanced features page 0

Name	Type	Register address		Default	Comment
		Hex	Binary		
MAG_SENSITIVITY_L	R/W	BA	10111010	00100100	
MAG_SENSITIVITY_H	R/W	BB	10111011	00010110	
MAG_OFFX_L	R/W	C0	11000000	00000000	
MAG_OFFX_H	R/W	C1	11000001	00000000	
MAG_OFFY_L	R/W	C2	11000010	00000000	
MAG_OFFY_H	R/W	C3	11000011	00000000	
MAG_OFFZ_L	R/W	C4	11000100	00000000	
MAG_OFFZ_H	R/W	C5	11000101	00000000	
MAG_SI_XX_L	R/W	C6	11000110	00000000	
MAG_SI_XX_H	R/W	C7	11000111	00111100	
MAG_SI_XY_L	R/W	C8	11001000	00000000	
MAG_SI_XY_H	R/W	C9	11001001	00000000	
MAG_SI_XZ_L	R/W	CA	11001010	00000000	
MAG_SI_XZ_H	R/W	CB	11001011	00000000	
MAG_SI_YY_L	R/W	CC	11001100	00000000	
MAG_SI_YY_H	R/W	CD	11001101	00111100	
MAG_SI_YZ_L	R/W	CE	11001110	00000000	
MAG_SI_YZ_H	R/W	CF	11001111	00000000	
MAG_SI_ZZ_L	R/W	D0	11010000	00000000	
MAG_SI_ZZ_H	R/W	D1	11010001	00111100	
MAG_CFG_A	R/W	D4	11010100	00000101	
MAG_CFG_B	R/W	D5	11010101	00000010	

The table given below provides a list of the registers for the embedded advanced features page 1. These registers are accessible when PAGE_SEL[3:0] are set to 0001 in PAGE_SEL (02h).

Table 260. Register address map - embedded advanced features page 1

Name	Type	Register address		Default	Comment
		Hex	Binary		
FSM_LC_TIMEOUT_L	R/W	7A	01111010	00000000	
FSM_LC_TIMEOUT_H	R/W	7B	01111011	00000000	
FSM_PROGRAMS	R/W	7C	01111100	00000000	
FSM_START_ADD_L	R/W	7E	01111110	00000000	
FSM_START_ADD_H	R/W	7F	01111111	00000000	
PEDO_CMD_REG	R/W	83	10000011	00000000	

Name	Type	Register address		Default	Comment
		Hex	Binary		
PEDO_DEB_STEPS_CONF	R/W	84	10000100	00001010	
PEDO_SC_DELTAT_L	R/W	D0	11010000	00000000	
PEDO_SC_DELTAT_H	R/W	D1	11010001	00000000	

Reserved registers must not be changed. Writing to those registers may cause permanent damage to the device.

The content of the registers that are loaded at boot should not be changed. They contain the factory calibration values. Their content is automatically restored when the device is powered up.

Write procedure example:

Example: write value 06h register at address 84h (PEDO_DEB_STEPS_CONF) in page 1

1. Write bit FUNC_CFG_EN = 1 in FUNC_CFG_ACCESS (01h) // Enable access to embedded functions registers
2. Write bit PAGE_WRITE = 1 in PAGE_RW (17h) register // Select write operation mode
3. Write 0001 in PAGE_SEL[3:0] field of register PAGE_SEL (02h) // Select page 1
4. Write 84h in PAGE_ADDR register (08h) // Set address
5. Write 06h in PAGE_DATA register (09h) // Set value to be written
6. Write bit PAGE_WRITE = 0 in PAGE_RW (17h) register // Write operation disabled
7. Write bit FUNC_CFG_EN = 0 in FUNC_CFG_ACCESS (01h) // Disable access to embedded functions registers

Read procedure example:

Example: read value of register at address 84h (PEDO_DEB_STEPS_CONF) in page 1

1. Write bit FUNC_CFG_EN = 1 in FUNC_CFG_ACCESS (01h) // Enable access to embedded functions registers
2. Write bit PAGE_READ = 1 in PAGE_RW (17h) register // Select read operation mode
3. Write 0001 in PAGE_SEL[3:0] field of register PAGE_SEL (02h) // Select page 1
4. Write 84h in PAGE_ADDR register (08h) // Set address
5. Read value of PAGE_DATA register (09h) // Get register value
6. Write bit PAGE_READ = 0 in PAGE_RW (17h) register // Read operation disabled
7. Write bit FUNC_CFG_EN = 0 in FUNC_CFG_ACCESS (01h) // Disable access to embedded functions registers

Note: Steps 1 and 2 of both procedures are intended to be performed at the beginning of the procedure. Steps 6 and 7 of both procedures are intended to be performed at the end of the procedure. If the procedure involves multiple operations, only steps 3, 4 and 5 must be repeated for each operation. If, in particular, the multiple operations involve consecutive registers, only step 5 can be performed.

13 Embedded advanced features register description

13.1 Page 0 - embedded advanced features registers

13.1.1 MAG_SENSITIVITY_L (BAh) and MAG_SENSITIVITY_H (BBh)

External magnetometer sensitivity value register (R/W) for the finite state machine

This register corresponds to the LSB-to-gauss conversion value of the external magnetometer sensor. The register value is expressed in half-precision floating-point format: SEEEEEFFFFFFFFFF (S: 1 sign bit; E: 5 exponent bits; F: 10 fraction bits).

Default value of MAG_SENS[15:0] is 0x1624, corresponding to 0.0015 gauss/LSB.

Table 261. MAG_SENSITIVITY_L register

MAG_ SENS_7	MAG_ SENS_6	MAG_ SENS_5	MAG_ SENS_4	MAG_ SENS_3	MAG_ SENS_2	MAG_ SENS_1	MAG_ SENS_0

Table 262. MAG_SENSITIVITY_L register description

MAG_SENS_[7:0]	External magnetometer sensitivity (LSbyte). Default value: 00100100

Table 263. MAG_SENSITIVITY_H register

MAG_ SENS_15	MAG_ SENS_14	MAG_ SENS_13	MAG_ SENS_12	MAG_ SENS_11	MAG_ SENS_10	MAG_ SENS_9	MAG_ SENS_8

Table 264. MAG_SENSITIVITY_H register description

MAG_SENS_[15:8]	External magnetometer sensitivity (MSbyte). Default value: 00010110

13.1.2 MAG_OFFX_L (C0h) and MAG_OFFX_H (C1h)

Offset for X-axis hard-iron compensation register (R/W)

The value is expressed in half-precision floating-point format: SEEEEEFFFFFFFFFF (S: 1 sign bit; E: 5 exponent bits; F: 10 fraction bits).

Table 265. MAG_OFFX_L register

MAG_OFFX_7	MAG_OFFX_6	MAG_OFFX_5	MAG_OFFX_4	MAG_OFFX_3	MAG_OFFX_2	MAG_OFFX_1	MAG_OFFX_0

Table 266. MAG_OFFX_L register description

MAG_OFFX_[7:0]	Offset for X-axis hard-iron compensation (LSbyte). Default value: 00000000

Table 267. MAG_OFFX_H register

MAG_OFFX_15	MAG_OFFX_14	MAG_OFFX_13	MAG_OFFX_12	MAG_OFFX_11	MAG_OFFX_10	MAG_OFFX_9	MAG_OFFX_8

Table 268. MAG_OFFX_H register description

MAG_OFFX_[15:8]	Offset for X-axis hard-iron compensation (MSbyte). Default value: 00000000

13.1.3 MAG_OFFY_L (C2h) and MAG_OFFY_H (C3h)

Offset for Y-axis hard-iron compensation register (R/W)

The value is expressed in half-precision floating-point format: SEEEEEFFFFFFFFFF (S: 1 sign bit; E: 5 exponent bits; F: 10 fraction bits).

Table 269. MAG_OFFY_L register

MAG_OFFY_7	MAG_OFFY_6	MAG_OFFY_5	MAG_OFFY_4	MAG_OFFY_3	MAG_OFFY_2	MAG_OFFY_1	MAG_OFFY_0

Table 270. MAG_OFFY_L register description

MAG_OFFY_[7:0]	Offset for Y-axis hard-iron compensation (LSbyte). Default value: 00000000

Table 271. MAG_OFFY_H register

MAG_OFFY_15	MAG_OFFY_14	MAG_OFFY_13	MAG_OFFY_12	MAG_OFFY_11	MAG_OFFY_10	MAG_OFFY_9	MAG_OFFY_8

Table 272. MAG_OFFY_H register description

MAG_OFFY_[15:8]	Offset for Y-axis hard-iron compensation (MSbyte). Default value: 00000000

13.1.4 MAG_OFFZ_L (C4h) and MAG_OFFZ_H (C5h)

Offset for Z-axis hard-iron compensation register (R/W)

The value is expressed in half-precision floating-point format: SEEEEEFFFFFFFFFF (S: 1 sign bit; E: 5 exponent bits; F: 10 fraction bits).

Table 273. MAG_OFFZ_L register

MAG_OFFZ_7	MAG_OFFZ_6	MAG_OFFZ_5	MAG_OFFZ_4	MAG_OFFZ_3	MAG_OFFZ_2	MAG_OFFZ_1	MAG_OFFZ_0

Table 274. MAG_OFFZ_L register description

MAG_OFFZ_[7:0]	Offset for Z-axis hard-iron compensation (LSbyte). Default value: 00000000

Table 275. MAG_OFFZ_H register

MAG_OFFZ_15	MAG_OFFZ_14	MAG_OFFZ_13	MAG_OFFZ_12	MAG_OFFZ_11	MAG_OFFZ_10	MAG_OFFZ_9	MAG_OFFZ_8

Table 276. MAG_OFFZ_H register description

MAG_OFFZ_[15:8]	Offset for Z-axis hard-iron compensation (MSbyte). Default value: 00000000

13.1.5 MAG_SI_XX_L (C6h) and MAG_SI_XX_H (C7h)

Soft-iron (3x3 symmetric) matrix correction register (R/W)

The value is expressed in half-precision floating-point format: SEEEEEFFFFFFFFFF (S: 1 sign bit; E: 5 exponent bits; F: 10 fraction bits).

Table 277. MAG_SI_XX_L register

MAG_SI_XX_7	MAG_SI_XX_6	MAG_SI_XX_5	MAG_SI_XX_4	MAG_SI_XX_3	MAG_SI_XX_2	MAG_SI_XX_1	MAG_SI_XX_0

Table 278. MAG_SI_XX_L register description

MAG_SI_XX_[7:0]	Soft-iron correction row1 col1 coefficient (LSbyte). Default value: 00000000

Table 279. MAG_SI_XX_H register

MAG_SI_XX_15	MAG_SI_XX_14	MAG_SI_XX_13	MAG_SI_XX_12	MAG_SI_XX_11	MAG_SI_XX_10	MAG_SI_XX_9	MAG_SI_XX_8

Table 280. MAG_SI_XX_H register description

MAG_SI_XX_[15:8]	Soft-iron correction row1 col1 coefficient (MSbyte). Default value: 00111100

13.1.6 MAG_SI_XY_L (C8h) and MAG_SI_XY_H (C9h)

Soft-iron (3x3 symmetric) matrix correction register (R/W)

The value is expressed in half-precision floating-point format: SEEEEEFFFFFFFFFF (S: 1 sign bit; E: 5 exponent bits; F: 10 fraction bits).

Table 281. MAG_SI_XY_L register

MAG_SI_XY_7	MAG_SI_XY_6	MAG_SI_XY_5	MAG_SI_XY_4	MAG_SI_XY_3	MAG_SI_XY_2	MAG_SI_XY_1	MAG_SI_XY_0

Table 282. MAG_SI_XY_L register description

MAG_SI_XY_[7:0]	Soft-iron correction row1 col2 (and row2 col1) coefficient (LSbyte). Default value: 00000000

Table 283. MAG_SI_XY_H register

MAG_SI_XY_15	MAG_SI_XY_14	MAG_SI_XY_13	MAG_SI_XY_12	MAG_SI_XY_11	MAG_SI_XY_10	MAG_SI_XY_9	MAG_SI_XY_8

Table 284. MAG_SI_XY_H register description

MAG_SI_XY_[15:8]	Soft-iron correction row1 col2 (and row2 col1) coefficient (MSbyte). Default value: 00000000

13.1.7 MAG_SI_XZ_L (CAh) and MAG_SI_XZ_H (CBh)

Soft-iron (3x3 symmetric) matrix correction register (R/W)

The value is expressed in half-precision floating-point format: SEEEEEFFFFFFFFFF (S: 1 sign bit; E: 5 exponent bits; F: 10 fraction bits).

Table 285. MAG_SI_XZ_L register

MAG_SI_XZ_7	MAG_SI_XZ_6	MAG_SI_XZ_5	MAG_SI_XZ_4	MAG_SI_XZ_3	MAG_SI_XZ_2	MAG_SI_XZ_1	MAG_SI_XZ_0

Table 286. MAG_SI_XZ_L register description

MAG_SI_XZ_[7:0]	Soft-iron correction row1 col3 (and row3 col1) coefficient (LSbyte). Default value: 00000000

Table 287. MAG_SI_XZ_H register

MAG_SI_XZ_15	MAG_SI_XZ_14	MAG_SI_XZ_13	MAG_SI_XZ_12	MAG_SI_XZ_11	MAG_SI_XZ_10	MAG_SI_XZ_9	MAG_SI_XZ_8

Table 288. MAG_SI_XZ_H register description

MAG_SI_XZ_[15:8]	Soft-iron correction row1 col3 (and row3 col1) coefficient (MSbyte). Default value: 00000000

13.1.8 MAG_SI_YY_L (CCh) and MAG_SI_YY_H (CDh)

Soft-iron (3x3 symmetric) matrix correction register (R/W)

The value is expressed in half-precision floating-point format: SEEEEEFFFFFFFFFF (S: 1 sign bit; E: 5 exponent bits; F: 10 fraction bits).

Table 289. MAG_SI_YY_L register

MAG_SI_YY_7	MAG_SI_YY_6	MAG_SI_YY_5	MAG_SI_YY_4	MAG_SI_YY_3	MAG_SI_YY_2	MAG_SI_YY_1	MAG_SI_YY_0

Table 290. MAG_SI_YY_L register description

MAG_SI_YY_[7:0]	Soft-iron correction row2 col2 coefficient (LSbyte). Default value: 00000000

Table 291. MAG_SI_YY_H register

MAG_SI_YY_15	MAG_SI_YY_14	MAG_SI_YY_13	MAG_SI_YY_12	MAG_SI_YY_11	MAG_SI_YY_10	MAG_SI_YY_9	MAG_SI_YY_8

Table 292. MAG_SI_YY_H register description

MAG_SI_YY_[15:8]	Soft-iron correction row2 col2 coefficient (MSbyte). Default value: 00111100

13.1.9 MAG_SI_YZ_L (CEh) and MAG_SI_YZ_H (CFh)

Soft-iron (3x3 symmetric) matrix correction register (R/W)

The value is expressed in half-precision floating-point format: SEEEEEFFFFFFFFFF (S: 1 sign bit; E: 5 exponent bits; F: 10 fraction bits).

Table 293. MAG_SI_YZ_L register

MAG_SI_YZ_7	MAG_SI_YZ_6	MAG_SI_YZ_5	MAG_SI_YZ_4	MAG_SI_YZ_3	MAG_SI_YZ_2	MAG_SI_YZ_1	MAG_SI_YZ_0

Table 294. MAG_SI_YZ_L register description

MAG_SI_YZ_[7:0]	Soft-iron correction row2 col3 (and row3 col2) coefficient (LSbyte). Default value: 00000000

Table 295. MAG_SI_YZ_H register

MAG_SI_YZ_15	MAG_SI_YZ_14	MAG_SI_YZ_13	MAG_SI_YZ_12	MAG_SI_YZ_11	MAG_SI_YZ_10	MAG_SI_YZ_9	MAG_SI_YZ_8

Table 296. MAG_SI_YZ_H register description

MAG_SI_YZ_[15:8]	Soft-iron correction row2 col3 (and row3 col2) coefficient (MSbyte). Default value: 00000000

13.1.10 MAG_SI_ZZ_L (D0h) and MAG_SI_ZZ_H (D1h)

Soft-iron (3x3 symmetric) matrix correction register (R/W)

The value is expressed in half-precision floating-point format: SEEEEEFFFFFFFFFF (S: 1 sign bit; E: 5 exponent bits; F: 10 fraction bits).

Table 297. MAG_SI_ZZ_L register

MAG_SI_ZZ_7	MAG_SI_ZZ_6	MAG_SI_ZZ_5	MAG_SI_ZZ_4	MAG_SI_ZZ_3	MAG_SI_ZZ_2	MAG_SI_ZZ_1	MAG_SI_ZZ_0

Table 298. MAG_SI_ZZ_L register description

MAG_SI_ZZ_[7:0]	Soft-iron correction row3 col3 coefficient (LSbyte). Default value: 00000000

Table 299. MAG_SI_ZZ_H register

MAG_SI_ZZ_15	MAG_SI_ZZ_14	MAG_SI_ZZ_13	MAG_SI_ZZ_12	MAG_SI_ZZ_11	MAG_SI_ZZ_10	MAG_SI_ZZ_9	MAG_SI_ZZ_8

Table 300. MAG_SI_ZZ_H register description

MAG_SI_ZZ_[15:8]	Soft-iron correction row3 col3 coefficient (MSbyte). Default value: 00111100

13.1.11 MAG_CFG_A (D4h)

External magnetometer coordinates (Y and Z axes) rotation register (R/W)

Table 301. MAG_CFG_A register

0[1]	MAG_Y_ AXIS2	MAG_Y_ AXIS1	MAG_Y_ AXIS0	0[1]	MAG_Z_ AXIS2	MAG_Z_ AXIS1	MAG_Z_ AXIS0

1. *This bit must be set to 0 for the correct operation of the device.*

Table 302. MAG_CFG_A description

MAG_Y_AXIS[2:0]	Magnetometer Y-axis coordinates rotation (to be aligned to accelerometer/gyroscope axes orientation) (000: Y = Y; (default) 001: Y = -Y; 010: Y = X; 011: Y = -X; 100: Y = -Z; 101: Y = Z; Others: Y = Y)
MAG_Z_AXIS[2:0]	Magnetometer Z-axis coordinates rotation (to be aligned to accelerometer/gyroscope axes orientation) (000: Z = Y; 001: Z = -Y; 010: Z = X; 011: Z = -X; 100: Z = -Z; 101: Z = Z; (default) Others: Z = Y)

13.1.12 MAG_CFG_B (D5h)

External magnetometer coordinates (X-axis) rotation register (R/W)

Table 303. MAG_CFG_B register

0[1]	0[1]	0[1]	0[1]	0[1]	MAG_X_ AXIS2	MAG_X_ AXIS1	MAG_X_ AXIS0

1. *This bit must be set to 0 for the correct operation of the device.*

Table 304. MAG_CFG_B description

MAG_X_AXIS[2:0]	Magnetometer X-axis coordinates rotation (to be aligned to accelerometer/gyroscope axes orientation) (000: X = Y; 001: X = -Y; 010: X = X; (default) 011: X = -X; 100: X = -Z; 101: X = Z; Others: X = Y)

13.2 Page 1 - embedded advanced features registers

13.2.1 FSM_LC_TIMEOUT_L (7Ah) and FSM_LC_TIMEOUT_H (7Bh)

FSM long counter timeout register (R/W)

The long counter timeout value is an unsigned integer value (16-bit format). When the long counter value reaches this value, the FSM generates an interrupt.

Table 305. FSM_LC_TIMEOUT_L register

FSM_LC_ TIMEOUT7	FSM_LC_ TIMEOUT6	FSM_LC_ TIMEOUT5	FSM_LC_ TIMEOUT4	FSM_LC_ TIMEOUT3	FSM_LC_ TIMEOUT2	FSM_LC_ TIMEOUT1	FSM_LC_ TIMEOUT0

Table 306. FSM_LC_TIMEOUT_L register description

FSM_LC_TIMEOUT[7:0]	FSM long counter timeout value (LSbyte). Default value: 00000000

Table 307. FSM_LC_TIMEOUT_H register

FSM_LC_ TIMEOUT15	FSM_LC_ TIMEOUT14	FSM_LC_ TIMEOUT13	FSM_LC_ TIMEOUT12	FSM_LC_ TIMEOUT11	FSM_LC_ TIMEOUT10	FSM_LC_ TIMEOUT9	FSM_LC_ TIMEOUT8

Table 308. FSM_LC_TIMEOUT_H register description

FSM_LC_TIMEOUT[15:8]	FSM long counter timeout value (MSbyte). Default value: 00000000

13.2.2 FSM_PROGRAMS (7Ch)

FSM number of programs register (R/W)

Table 309. FSM_PROGRAMS register

FSM_N_ PROG7	FSM_N_ PROG6	FSM_N_ PROG5	FSM_N_ PROG4	FSM_N_ PROG3	FSM_N_ PROG2	FSM_N_ PROG1	FSM_N_ PROG0

Table 310. FSM_PROGRAMS register description

FSM_N_PROG[7:0]	Number of FSM programs; must be less than or equal to 16. Default value: 00000000

13.2.3 FSM_START_ADD_L (7Eh) and FSM_START_ADD_H (7Fh)

FSM start address register (R/W). First available address is 0x033C.

Table 311. FSM_START_ADD_L register

FSM_ START7	FSM_ START6	FSM_ START5	FSM_ START4	FSM_ START3	FSM_ START2	FSM_ START1	FSM_ START0

Table 312. FSM_START_ADD_L register description

FSM_START[7:0]	FSM start address value (LSbyte). Default value: 00000000

Table 313. FSM_START_ADD_H register

FSM_ START15	FSM_ START14	FSM_ START13	FSM_ START12	FSM_ START11	FSM_ START10	FSM_ START9	FSM_ START8

Table 314. FSM_START_ADD_H register description

FSM_START[15:8]	FSM start address value (MSbyte). Default value: 00000000

13.2.4 PEDO_CMD_REG (83h)

Pedometer configuration register (R/W)

Table 315. PEDO_CMD_REG register

0[1]	0[1]	0[1]	0[1]	CARRY_ COUNT_EN	FP_ REJECTION_EN	0[1]	AD_DET_EN

1. *This bit must be set to 0 for the correct operation of the device.*

Table 316. PEDO_CMD_REG register description

CARRY_COUNT_EN	Set when user wants to generate interrupt only on count overflow event.
FP_REJECTION_EN[1]	Enables the false-positive rejection feature.
AD_DET_EN[2]	Enables the advanced detection feature.

1. *This bit is active if the PEDO_ADV_EN bit of EMB_FUNC_EN_B (05h) is set to 1.*
2. *This bit is active if both the FP_REJECTION_EN bit in the PEDO_CMD_REG (83h) register and the PEDO_ADV_EN bit of EMB_FUNC_EN_B (05h) are set to 1.*

13.2.5 PEDO_DEB_STEPS_CONF (84h)

Pedometer debounce configuration register (R/W)

Table 317. PEDO_DEB_STEPS_CONF register

DEB_ STEP7	DEB_ STEP6	DEB_ STEP5	DEB_ STEP4	DEB_ STEP3	DEB_ STEP2	DEB_ STEP1	DEB_ STEP0

Table 318. PEDO_DEB_STEPS_CONF register description

DEB_STEP[7:0]	Debounce threshold. Minimum number of steps to increment the step counter (debounce). Default value: 00001010

13.2.6 PEDO_SC_DELTAT_L (D0h) & PEDO_SC_DELTAT_H (D1h)

Time period register for step detection on delta time (R/W)

Table 319. PEDO_SC_DELTAT_L register

PD_SC_7	PD_SC_6	PD_SC_5	PD_SC_4	PD_SC_3	PD_SC_2	PD_SC_1	PD_SC_0

Table 320. PEDO_SC_DELTAT_H register

PD_SC_15	PD_SC_14	PD_SC_13	PD_SC_12	PD_SC_11	PD_SC_10	PD_SC_9	PD_SC_8

Table 321. PEDO_SC_DELTAT_H/L register description

PD_SC_[15:0]	Time period value (1LSB = 6.4 ms)

14 Sensor hub register mapping

The table given below provides a list of the registers for the sensor hub functions available in the device and the corresponding addresses. The sensor hub registers are accessible when bit SHUB_REG_ACCESS is set to 1 in FUNC_CFG_ACCESS (01h).

Table 322. Register address map - sensor hub registers

Name	Type	Register address		Default	Comment
		Hex	Binary		
SENSOR_HUB_1	R	02	00000010	output	
SENSOR_HUB_2	R	03	00000011	output	
SENSOR_HUB_3	R	04	00000100	output	
SENSOR_HUB_4	R	05	00000101	output	
SENSOR_HUB_5	R	06	00000110	output	
SENSOR_HUB_6	R	07	00000111	output	
SENSOR_HUB_7	R	08	00001000	output	
SENSOR_HUB_8	R	09	00001001	output	
SENSOR_HUB_9	R	0A	00001010	output	
SENSOR_HUB_10	R	0B	00001011	output	
SENSOR_HUB_11	R	0C	00001100	output	
SENSOR_HUB_12	R	0D	00001101	output	
SENSOR_HUB_13	R	0E	00001110	output	
SENSOR_HUB_14	R	0F	00001111	output	
SENSOR_HUB_15	R	10	00010000	output	
SENSOR_HUB_16	R	11	00010001	output	
SENSOR_HUB_17	R	12	00010010	output	
SENSOR_HUB_18	R	13	00010011	output	
MASTER_CONFIG	R/W	14	00010100	00000000	
SLV0_ADD	rw	15	00010101	00000000	
SLV0_SUBADD	R/W	16	00010110	00000000	
SLV0_CONFIG	R/W	17	0001 0111	00000000	
SLV1_ADD	R/W	18	00011000	00000000	
SLV1_SUBADD	R/W	19	00011001	00000000	
SLV1_CONFIG	R/W	1A	00011010	00000000	
SLV2_ADD	R/W	1B	00011011	00000000	
SLV2_SUBADD	R/W	1C	00011100	00000000	
SLV2_CONFIG	R/W	1D	00011101	00000000	
SLV3_ADD	R/W	1E	00011110	00000000	
SLV3_SUBADD	R/W	1F	00011111	00000000	
SLV3_CONFIG	R/W	20	00100000	00000000	
DATAWRITE_SLV0	R/W	21	00100001	00000000	
STATUS_MASTER	R	22	00100010	output	

Reserved registers must not be changed. Writing to those registers may cause permanent damage to the device.

The content of the registers that are loaded at boot should not be changed. They contain the factory calibration values. Their content is automatically restored when the device is powered up.

15 Sensor hub register description

15.1 SENSOR_HUB_1 (02h)

Sensor hub output register (R)

First byte associated to external sensors. The content of the register is consistent with the SLVx_CONFIG number of read operation configurations (for external sensors from x = 0 to x = 3).

Table 323. SENSOR_HUB_1 register

Sensor Hub1_7	Sensor Hub1_6	Sensor Hub1_5	Sensor Hub1_4	Sensor Hub1_3	Sensor Hub1_2	Sensor Hub1_1	Sensor Hub1_0

Table 324. SENSOR_HUB_1 register description

SensorHub1_[7:0]	First byte associated to external sensors

15.2 SENSOR_HUB_2 (03h)

Sensor hub output register (R)

Second byte associated to external sensors. The content of the register is consistent with the SLVx_CONFIG number of read operation configurations (for external sensors from x = 0 to x = 3).

Table 325. SENSOR_HUB_2 register

Sensor Hub2_7	Sensor Hub2_6	Sensor Hub2_5	Sensor Hub2_4	Sensor Hub2_3	Sensor Hub2_2	Sensor Hub2_1	Sensor Hub2_0

Table 326. SENSOR_HUB_2 register description

SensorHub2_[7:0]	Second byte associated to external sensors

15.3 SENSOR_HUB_3 (04h)

Sensor hub output register (R)

Third byte associated to external sensors. The content of the register is consistent with the SLVx_CONFIG number of read operation configurations (for external sensors from x = 0 to x = 3).

Table 327. SENSOR_HUB_3 register

Sensor Hub3_7	Sensor Hub3_6	Sensor Hub3_5	Sensor Hub3_4	Sensor Hub3_3	Sensor Hub3_2	Sensor Hub3_1	Sensor Hub3_0

Table 328. SENSOR_HUB_3 register description

SensorHub3_[7:0]	Third byte associated to external sensors

15.4 SENSOR_HUB_4 (05h)

Sensor hub output register (R)

Fourth byte associated to external sensors. The content of the register is consistent with the SLVx_CONFIG number of read operation configurations (for external sensors from x = 0 to x = 3).

Table 329. SENSOR_HUB_4 register

Sensor Hub4_7	Sensor Hub4_6	Sensor Hub4_5	Sensor Hub4_4	Sensor Hub4_3	Sensor Hub4_2	Sensor Hub4_1	Sensor Hub4_0

Table 330. SENSOR_HUB_4 register description

SensorHub4_[7:0]	Fourth byte associated to external sensors

15.5 SENSOR_HUB_5 (06h)

Sensor hub output register (R)

Fifth byte associated to external sensors. The content of the register is consistent with the SLVx_CONFIG number of read operation configurations (for external sensors from x = 0 to x = 3).

Table 331. SENSOR_HUB_5 register

Sensor Hub5_7	Sensor Hub5_6	Sensor Hub5_5	Sensor Hub5_4	Sensor Hub5_3	Sensor Hub5_2	Sensor Hub5_1	Sensor Hub5_0

Table 332. SENSOR_HUB_5 register description

SensorHub5_[7:0]	Fifth byte associated to external sensors

15.6 SENSOR_HUB_6 (07h)

Sensor hub output register (R)

Sixth byte associated to external sensors. The content of the register is consistent with the SLVx_CONFIG number of read operation configurations (for external sensors from x = 0 to x = 3).

Table 333. SENSOR_HUB_6 register

Sensor Hub6_7	Sensor Hub6_6	Sensor Hub6_5	Sensor Hub6_4	Sensor Hub6_3	Sensor Hub6_2	Sensor Hub6_1	Sensor Hub6_0

Table 334. SENSOR_HUB_6 register description

SensorHub6_[7:0]	Sixth byte associated to external sensors

15.7 SENSOR_HUB_7 (08h)

Sensor hub output register (R)

Seventh byte associated to external sensors. The content of the register is consistent with the SLVx_CONFIG number of read operation configurations (for external sensors from x = 0 to x = 3).

Table 335. SENSOR_HUB_7 register

Sensor Hub7_7	Sensor Hub7_6	Sensor Hub7_5	Sensor Hub7_4	Sensor Hub7_3	Sensor Hub7_2	Sensor Hub7_1	Sensor Hub7_0

Table 336. SENSOR_HUB_7 register description

SensorHub7_[7:0]	Seventh byte associated to external sensors

15.8 SENSOR_HUB_8 (09h)

Sensor hub output register (R)

Eighth byte associated to external sensors. The content of the register is consistent with the SLVx_CONFIG number of read operation configurations (for external sensors from x = 0 to x = 3).

Table 337. SENSOR_HUB_8 register

Sensor Hub8_7	Sensor Hub8_6	Sensor Hub8_5	Sensor Hub8_4	Sensor Hub8_3	Sensor Hub8_2	Sensor Hub8_1	Sensor Hub8_0

Table 338. SENSOR_HUB_8 register description

SensorHub8_[7:0]	Eighth byte associated to external sensors

15.9 SENSOR_HUB_9 (0Ah)

Sensor hub output register (R)

Ninth byte associated to external sensors. The content of the register is consistent with the SLVx_CONFIG number of read operation configurations (for external sensors from x = 0 to x = 3).

Table 339. SENSOR_HUB_9 register

Sensor Hub9_7	Sensor Hub9_6	Sensor Hub9_5	Sensor Hub9_4	Sensor Hub9_3	Sensor Hub9_2	Sensor Hub9_1	Sensor Hub9_0

Table 340. SENSOR_HUB_9 register description

SensorHub9_[7:0]	Ninth byte associated to external sensors

15.10 SENSOR_HUB_10 (0Bh)

Sensor hub output register (R)

Tenth byte associated to external sensors. The content of the register is consistent with the SLVx_CONFIG number of read operation configurations (for external sensors from x = 0 to x = 3).

Table 341. SENSOR_HUB_10 register

Sensor Hub10_7	Sensor Hub10_6	Sensor Hub10_5	Sensor Hub10_4	Sensor Hub10_3	Sensor Hub10_2	Sensor Hub10_1	Sensor Hub10_0

Table 342. SENSOR_HUB_10 register description

SensorHub10_[7:0]	Tenth byte associated to external sensors

15.11 SENSOR_HUB_11 (0Ch)

Sensor hub output register (R)

Eleventh byte associated to external sensors. The content of the register is consistent with the SLVx_CONFIG number of read operation configurations (for external sensors from x = 0 to x = 3).

Table 343. SENSOR_HUB_11 register

Sensor Hub11_7	Sensor Hub11_6	Sensor Hub11_5	Sensor Hub11_4	Sensor Hub11_3	Sensor Hub11_2	Sensor Hub11_1	Sensor Hub11_0

Table 344. SENSOR_HUB_11 register description

SensorHub11_[7:0]	Eleventh byte associated to external sensors

15.12 SENSOR_HUB_12 (0Dh)

Sensor hub output register (R)

Twelfth byte associated to external sensors. The content of the register is consistent with the SLVx_CONFIG number of read operation configurations (for external sensors from x = 0 to x = 3).

Table 345. SENSOR_HUB_12 register

Sensor Hub12_7	Sensor Hub12_6	Sensor Hub12_5	Sensor Hub12_4	Sensor Hub12_3	Sensor Hub12_2	Sensor Hub12_1	Sensor Hub12_0

Table 346. SENSOR_HUB_12 register description

SensorHub12_[7:0]	Twelfth byte associated to external sensors

15.13 SENSOR_HUB_13 (0Eh)

Sensor hub output register (R)

Thirteenth byte associated to external sensors. The content of the register is consistent with the SLVx_CONFIG number of read operation configurations (for external sensors from x = 0 to x = 3).

Table 347. SENSOR_HUB_13 register

Sensor Hub13_7	Sensor Hub13_6	Sensor Hub13_5	Sensor Hub13_4	Sensor Hub13_3	Sensor Hub13_2	Sensor Hub13_1	Sensor Hub13_0

Table 348. SENSOR_HUB_13 register description

SensorHub13_[7:0]	Thirteenth byte associated to external sensors

15.14 SENSOR_HUB_14 (0Fh)

Sensor hub output register (R)

Fourteenth byte associated to external sensors. The content of the register is consistent with the SLVx_CONFIG number of read operation configurations (for external sensors from x = 0 to x = 3).

Table 349. SENSOR_HUB_14 register

Sensor Hub14_7	Sensor Hub14_6	Sensor Hub14_5	Sensor Hub14_4	Sensor Hub14_3	Sensor Hub14_2	Sensor Hub14_1	Sensor Hub14_0

Table 350. SENSOR_HUB_14 register description

SensorHub14_[7:0]	Fourteenth byte associated to external sensors

15.15 SENSOR_HUB_15 (10h)

Sensor hub output register (R)

Fifteenth byte associated to external sensors. The content of the register is consistent with the SLVx_CONFIG number of read operation configurations (for external sensors from x = 0 to x = 3).

Table 351. SENSOR_HUB_15 register

Sensor Hub15_7	Sensor Hub15_6	Sensor Hub15_5	Sensor Hub15_4	Sensor Hub15_3	Sensor Hub15_2	Sensor Hub15_1	Sensor Hub15_0

Table 352. SENSOR_HUB_15 register description

SensorHub15_[7:0]	Fifteenth byte associated to external sensors

15.16 SENSOR_HUB_16 (11h)

Sensor hub output register (R)

Sixteenth byte associated to external sensors. The content of the register is consistent with the SLVx_CONFIG number of read operation configurations (for external sensors from x = 0 to x = 3).

Table 353. SENSOR_HUB_16 register

Sensor Hub16_7	Sensor Hub16_6	Sensor Hub16_5	Sensor Hub16_4	Sensor Hub16_3	Sensor Hub16_2	Sensor Hub16_1	Sensor Hub16_0

Table 354. SENSOR_HUB_16 register description

SensorHub16_[7:0]	Sixteenth byte associated to external sensors

15.17 SENSOR_HUB_17 (12h)

Sensor hub output register (R)

Seventeenth byte associated to external sensors. The content of the register is consistent with the SLVx_CONFIG number of read operation configurations (for external sensors from x = 0 to x = 3).

Table 355. SENSOR_HUB_17 register

Sensor Hub17_7	Sensor Hub17_6	Sensor Hub17_5	Sensor Hub17_4	Sensor Hub17_3	Sensor Hub17_2	Sensor Hub17_1	Sensor Hub17_7

Table 356. SENSOR_HUB_17 register description

SensorHub17_[7:0]	Seventeenth byte associated to external sensors

15.18 SENSOR_HUB_18 (13h)

Sensor hub output register (R)

Eighteenth byte associated to external sensors. The content of the register is consistent with the SLVx_CONFIG number of read operation configurations (for external sensors from x = 0 to x = 3).

Table 357. SENSOR_HUB_17 register

Sensor Hub18_7	Sensor Hub18_6	Sensor Hub18_5	Sensor Hub18_4	Sensor Hub18_3	Sensor Hub18_2	Sensor Hub18_1	Sensor Hub18_0

Table 358. SENSOR_HUB_17 register description

SensorHub18_[7:0]	Eighteenth byte associated to external sensors

15.19 MASTER_CONFIG (14h)

Master configuration register (R/W)

Table 359. MASTER_CONFIG register

RST_MASTER _REGS	WRITE_ ONCE	START_ CONFIG	PASS_ THROUGH_MODE	SHUB_ PU_EN	MASTER_ON	AUX_ SENS_ON1	AUX_ SENS_ON0

Table 360. MASTER_CONFIG register description

RST_MASTER_REGS	Resets master logic and output registers. Must be set to 1 and then set it to 0. Default value: 0
WRITE_ONCE	Slave 0 write operation is performed only at the first sensor hub cycle. Default value: 0 (0: write operation for each sensor hub cycle; 1: write operation only for the first sensor hub cycle)
START_CONFIG	Sensor hub trigger signal selection. Default value: 0 (0: sensor hub trigger signal is the accelerometer/gyro data-ready; 1: sensor hub trigger signal external from INT2 pin)
PASS_THROUGH_MODE	I²C interface pass-through. Default value: 0 (0: pass-through disabled; 1: pass-through enabled, main I²C line is short-circuited with the auxiliary line)
SHUB_PU_EN	Enables master I²C pull-up. Default value: 0 (0: internal pull-up on auxiliary I²C line disabled; 1: internal pull-up on auxiliary I²C line enabled)
MASTER_ON	Enables master I²C of sensor hub. Default: 0 (0: master I²C of sensor hub disabled; 1: master I²C of sensor hub enabled)
AUX_SENS_ON[1:0]	Number of external sensors to be read by the sensor hub. (00: one sensor (default); 01: two sensors; 10: three sensors; 11: four sensors)

15.20 SLV0_ADD (15h)

I²C slave address of the first external sensor (sensor 1) register (R/W)

Table 361. SLV0_ADD register

slave0_ add6	slave0_ add5	slave0_ add4	slave0_ add3	slave0_ add2	slave0_ add1	slave0_ add0	rw_0

Table 362. SLV_ADD register description

slave0_add[6:0]	I²C slave address of sensor 1 that can be read by the sensor hub. Default value: 0000000
rw_0	Read/write operation on sensor 1. Default value: 0 (0: write operation; 1: read operation)

15.21 SLV0_SUBADD (16h)

Address of register on the first external sensor (sensor 1) register (R/W)

Table 363. SLV0_SUBADD register

slave0_ reg7	slave0_ reg6	slave0_ reg5	slave0_ reg4	slave0_ reg3	slave0_ reg2	slave0_ reg1	slave0_ reg0

Table 364. SLV0_SUBADD register description

slave0_reg[7:0]	Address of register on sensor 1 that has to be read/written according to the rw_0 bit value in SLV0_ADD (15h). Default value: 00000000

15.22 SLV0_CONFIG (17h)

First external sensor (sensor 1) configuration and sensor hub settings register (R/W)

Table 365. SLV0_CONFIG register

SHUB_ ODR_1	SHUB_ ODR_0	0[(1)]	0[(1)]	BATCH_EXT _SENS_0_EN	Slave0_ numop2	Slave0_ numop1	Slave0_ numop0

1. *This bit must be set to 0 for the correct operation of the device.*

Table 366. SLV0_CONFIG register description

SHUB_ODR_[1:0]	Rate at which the master communicates. Default value: 00 (00: 104 Hz (or at the maximum ODR between the accelerometer and gyro if it is less than 104 Hz); 01: 52 Hz (or at the maximum ODR between the accelerometer and gyro if it is less than 52 Hz); 10: 26 Hz (or at the maximum ODR between the accelerometer and gyro if it is less than 26 Hz); 11: 12.5 Hz (or at the maximum ODR between the accelerometer and gyro if it is less than 12.5 Hz)
BATCH_EXT_ SENS_0_EN	Enables FIFO data batching of first slave. Default value: 0
Slave0_numop[2:0]	Number of read operations on sensor 1. Default value: 000

15.23 SLV1_ADD (18h)

I²C slave address of the second external sensor (sensor 2) register (R/W)

Table 367. SLV1_ADD register

Slave1_ add6	Slave1_ add5	Slave1_ add4	Slave1_ add3	Slave1_ add2	Slave1_ add1	Slave1_ add0	r_1

Table 368. SLV1_ADD register description

Slave1_add[6:0]	I²C slave address of sensor 2 that can be read by the sensor hub. Default value: 0000000
r_1	Enables read operation on sensor 2. Default value: 0 (0: read operation disabled; 1: read operation enabled)

15.24 SLV1_SUBADD (19h)

Address of register on the second external sensor (sensor 2) register (R/W)

Table 369. SLV1_SUBADD register

Slave1_ reg7	Slave1_ reg6	Slave1_ reg5	Slave1_ reg4	Slave1_ reg3	Slave1_ reg2	Slave1_ reg1	Slave1_ reg0

Table 370. SLV1_SUBADD register description

Slave1_reg[7:0]	Address of register on sensor 2 that has to be read/written according to the r_1 bit value in SLV1_ADD (18h).

15.25 SLV1_CONFIG (1Ah)

Second external sensor (sensor 2) configuration register (R/W)

Table 371. SLV1_CONFIG register

0(1)	0(1)	0(1)	0(1)	BATCH_EXT_ SENS_1_EN	Slave1_ numop2	Slave1_ numop1	Slave1_ numop0

1. *This bit must be set to 0 for the correct operation of the device.*

Table 372. SLV1_CONFIG register description

BATCH_EXT_SENS_1_EN	Enables FIFO data batching of second slave. Default value: 0
Slave1_numop[2:0]	Number of read operations on sensor 2. Default value: 000

15.26 SLV2_ADD (1Bh)

I²C slave address of the third external sensor (sensor 3) register (R/W)

Table 373. SLV2_ADD register

Slave2_ add6	Slave2_ add5	Slave2_ add4	Slave2_ add3	Slave2_ add2	Slave2_ add1	Slave2_ add0	r_2

Table 374. SLV2_ADD register description

Slave2_add[6:0]	I²C slave address of sensor 3 that can be read by the sensor hub.
r_2	Enables read operation on sensor 3. Default value: 0 (0: read operation disabled; 1: read operation enabled)

15.27 SLV2_SUBADD (1Ch)

Address of register on the third external sensor (sensor 3) register (R/W)

Table 375. SLV2_SUBADD register

Slave2_ reg7	Slave2_ reg6	Slave2_ reg5	Slave2_ reg4	Slave2_ reg3	Slave2_ reg2	Slave2_ reg1	Slave2_ reg0

Table 376. SLV2_SUBADD register description

Slave2_reg[7:0]	Address of register on sensor 3 that has to be read/written according to the r_2 bit value in SLV2_ADD (1Bh).

15.28 SLV2_CONFIG (1Dh)

Third external sensor (sensor 3) configuration register (R/W)

Table 377. SLV2_CONFIG register

0[1]	0[1]	0[1]	0[1]	BATCH_EXT _SENS_2_EN	Slave2_ numop2	Slave2_ numop1	Slave2_ numop0

1. *This bit must be set to 0 for the correct operation of the device.*

Table 378. SLV2_CONFIG register description

BATCH_EXT_SENS_2_EN	Enables FIFO data batching of third slave. Default value: 0
Slave2_numop[2:0]	Number of read operations on sensor 3. Default value: 000

15.29 SLV3_ADD (1Eh)

I²C slave address of the fourth external sensor (sensor 4) register (R/W)

Table 379. SLV3_ADD register

Slave3_ add6	Slave3_ add5	Slave3_ add4	Slave3_ add3	Slave3_ add2	Slave3_ add1	Slave3_ add0	r_3

Table 380. SLV3_ADD register description

Slave3_add[6:0]	I²C slave address of sensor 4 that can be read by the sensor hub.
r_3	Enables read operation on sensor 4. Default value: 0 (0: read operation disabled; 1: read operation enabled)

15.30 SLV3_SUBADD (1Fh)

Address of register on the fourth external sensor (sensor 4) register (R/W)

Table 381. SLV3_SUBADD register

Slave3_ reg7	Slave3_ reg6	Slave3_ reg5	Slave3_ reg4	Slave3_ reg3	Slave3_ reg2	Slave3_ reg1	Slave3_ reg0

Table 382. SLV3_SUBADD register description

Slave3_reg[7:0]	Address of register on sensor 4 that has to be read according to the r_3 bit value in SLV3_ADD (1Eh).

15.31 SLV3_CONFIG (20h)

Fourth external sensor (sensor 4) configuration register (R/W)

Table 383. SLV3_CONFIG register

0(1)	0(1)	0(1)	0(1)	BATCH_EXT _SENS_3_EN	Slave3_ numop2	Slave3_ numop1	Slave3_ numop0

1. *This bit must be set to 0 for the correct operation of the device.*

Table 384. SLV3_CONFIG register description

BATCH_EXT_SENS_3_EN	Enables FIFO data batching of fourth slave. Default value: 0
Slave3_numop[2:0]	Number of read operations on sensor 4. Default value: 000

15.32 DATAWRITE_SLV0 (21h)

Data to be written into the slave device register (R/W)

Table 385. DATAWRITE_SLV0 register

Slave0_ dataw7	Slave0_ dataw6	Slave0_ dataw5	Slave0_ dataw4	Slave0_ dataw3	Slave0_ dataw2	Slave0_ dataw1	Slave0_ dataw0

Table 386. DATAWRITE_SLV0 register description

Slave0_dataw[7:0]	Data to be written into the slave 0 device according to the rw_0 bit in register SLV0_ADD (15h). Default value: 00000000

15.33 STATUS_MASTER (22h)

Sensor hub source register (R)

Table 387. STATUS_MASTER register

WR_ONCE_ DONE	SLAVE3_ NACK	SLAVE2_ NACK	SLAVE1_ NACK	SLAVE0_ NACK	0	0	SENS_HUB _ENDOP

Table 388. STATUS_MASTER register description

WR_ONCE_DONE	When the bit WRITE_ONCE in MASTER_CONFIG (14h) is configured as 1, this bit is set to 1 when the write operation on slave 0 has been performed and completed. Default value: 0
SLAVE3_NACK	This bit is set to 1 if not acknowledge occurs on slave 3 communication. Default value: 0
SLAVE2_NACK	This bit is set to 1 if not acknowledge occurs on slave 2 communication. Default value: 0
SLAVE1_NACK	This bit is set to 1 if not acknowledge occurs on slave 1 communication. Default value: 0
SLAVE0_NACK	This bit is set to 1 if not acknowledge occurs on slave 0 communication. Default value: 0
SENS_HUB_ENDOP	Sensor hub communication status. Default value: 0 (0: sensor hub communication not concluded; 1: sensor hub communication concluded)

16 Soldering information

The LGA package is compliant with the ECOPACK and RoHS standard.
It is qualified for soldering heat resistance according to JEDEC J-STD-020.
For land pattern and soldering recommendations, consult technical note TN0018 available on www.st.com.

17 Package information

In order to meet environmental requirements, ST offers these devices in different grades of ECOPACK packages, depending on their level of environmental compliance. ECOPACK specifications, grade definitions and product status are available at: www.st.com. ECOPACK is an ST trademark.

17.1 LGA-14L package information

Figure 25. LGA-14L 2.5 x 3.0 x 0.86 mm package outline and mechanical data

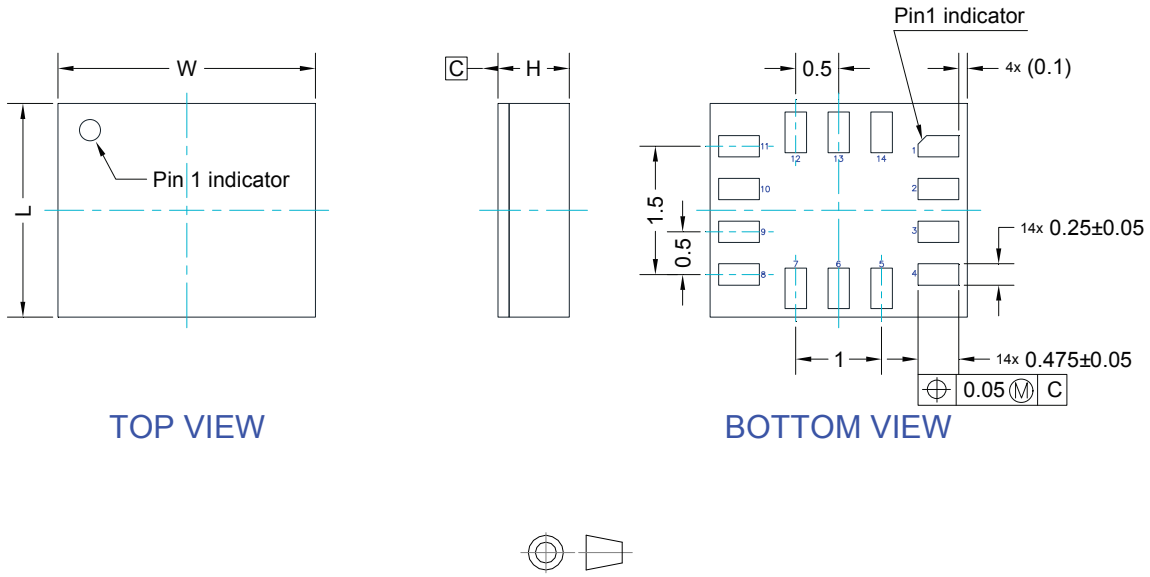

Dimensions are in millimeter unless otherwise specified
General tolerance is +/-0.1mm unless otherwise specified

OUTER DIMENSIONS

ITEM	DIMENSION [mm]	TOLERANCE [mm]
Length [L]	2.50	±0.1
Width [W]	3.00	±0.1
Height [H]	0.86	MAX

DM00249496_5

17.2 LGA-14 packing information

Figure 26. Carrier tape information for LGA-14 package

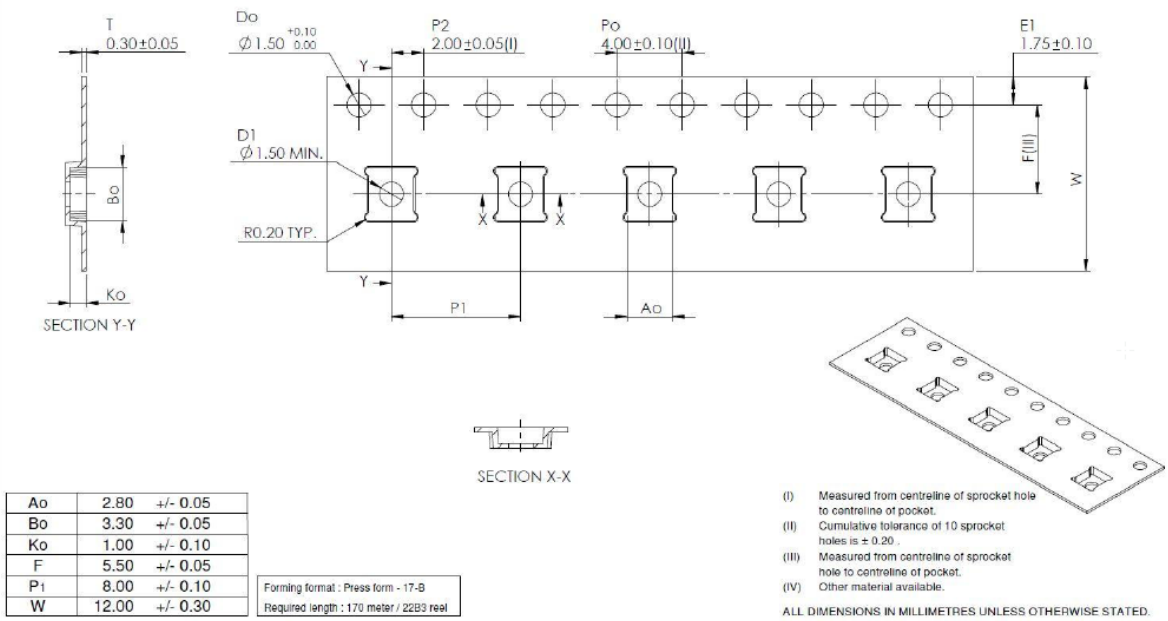

Ao	2.80	+/- 0.05
Bo	3.30	+/- 0.05
Ko	1.00	+/- 0.10
F	5.50	+/- 0.05
P_1	8.00	+/- 0.10
W	12.00	+/- 0.30

Forming format : Press form - 17-B
Required length : 170 meter / 22B3 reel

Figure 27. LGA-14 package orientation in carrier tape

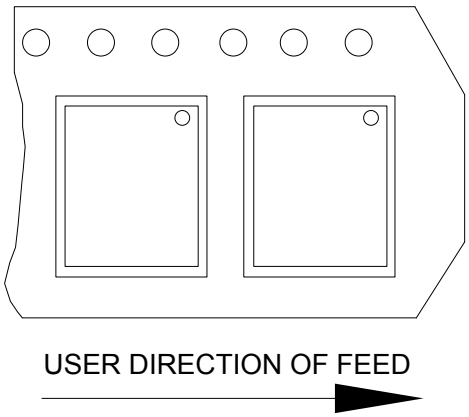

Figure 28. **Reel information for carrier tape of LGA-14 package**

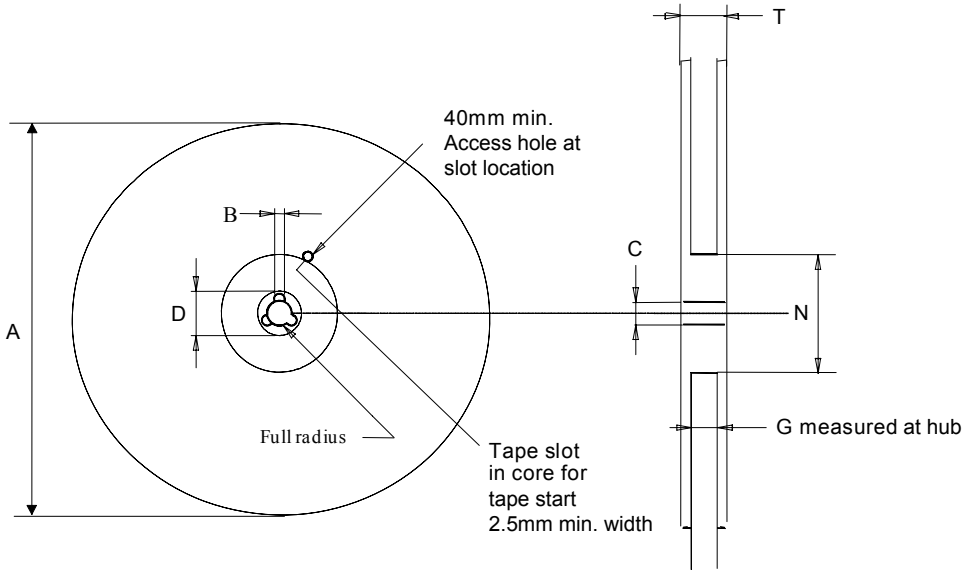

Table 389. **Reel dimensions for carrier tape of LGA-14 package**

Reel dimensions (mm)	
A (max)	330
B (min)	1.5
C	13 ±0.25
D (min)	20.2
N (min)	60
G	12.4 +2/-0
T (max)	18.4

Revision history

Table 390. Document revision history

Date	Revision	Changes
22-Aug-2018	1	Initial release
25-Jan-2019	2	Added product label indicating ST's commitment to sustainable technology Updated LA_TyOff in Table 2. Mechanical characteristics Updated footnotes in Table 4. Temperature sensor characteristics Updated Table 60. Gyroscope LPF1 bandwidth selection Updated EMB_FUNC_ODR_CFG_B (5Fh) Textual update in MAG_SENSITIVITY_L (BAh) and MAG_SENSITIVITY_H (BBh)
03-Jun-2024	3	Added product resources on page 1 Updated Note below Figure 5. SPI slave timing diagram (in mode 3) and Figure 6. I²C slave timing diagram Updated Note below Figure 23. LSM6DSO electrical connections in mode 3 and mode 4 (auxiliary 3/4-wire SPI) Updated pin 11 in mode 3/4 in Table 19. Internal pin status Updated description of D4D_EN bit in TAP_THS_6D (59h) Updated description of bits in INT_DUR2 (5Ah) Updated description of USR_OFF_ON_WU bit in WAKE_UP_THS (5Bh) Minor textual updates

Contents

1 **Overview** 3
2 **Embedded low-power features** 4
2.1 Tilt detection 4
2.2 Significant motion detection 4
2.3 Finite state machine 4
3 **Pin description** 6
3.1 Pin connections 7
4 **Module specifications** 9
4.1 Mechanical characteristics 9
4.2 Electrical characteristics 11
4.3 Temperature sensor characteristics 11
4.4 Communication interface characteristics 12
4.4.1 SPI - serial peripheral interface 12
4.4.2 I²C - inter-IC control interface 13
4.5 Absolute maximum ratings 14
4.6 Terminology 15
4.6.1 Sensitivity 15
4.6.2 Zero-*g* and zero-rate level 15
5 **Digital interfaces** 16
5.1 I²C/SPI interface 16
5.1.1 I²C serial interface 16
5.1.2 SPI bus interface 18
5.2 MIPI I3C^{SM} interface 22
5.2.1 MIPI I3C^{SM} slave interface 22
5.2.2 MIPI I3C^{SM} CCC supported commands 23
5.3 I²C/MIPI I3C^{SM} coexistence in LSM6DSO 24
5.4 Master I²C interface 25
5.5 Auxiliary SPI interface 25
6 **Functionality** 26
6.1 Operating modes 26
6.2 Accelerometer power modes 26
6.2.1 Accelerometer ultra-low-power mode 26
6.3 Gyroscope power modes 26
6.4 Block diagram of filters 27

6.4.1 Block diagrams of the accelerometer filters . . . 27
6.4.2 Block diagrams of the gyroscope filters . . . 29
6.5 FIFO . . . 31
6.5.1 Bypass mode . . . 31
6.5.2 FIFO mode . . . 32
6.5.3 Continuous mode . . . 32
6.5.4 Continuous-to-FIFO mode . . . 32
6.5.5 Bypass-to-continuous mode . . . 32
6.5.6 Bypass-to-FIFO mode . . . 33
6.5.7 FIFO reading procedure . . . 33
7 Application hints . . . 34
7.1 LSM6DSO electrical connections in mode 1 . . . 34
7.2 LSM6DSO electrical connections in mode 2 . . . 35
7.3 LSM6DSO electrical connections in mode 3 and mode 4 . . . 36
8 Register map . . . 39
9 Register description . . . 42
9.1 FUNC_CFG_ACCESS (01h) . . . 42
9.2 PIN_CTRL (02h) . . . 42
9.3 FIFO_CTRL1 (07h) . . . 43
9.4 FIFO_CTRL2 (08h) . . . 43
9.5 FIFO_CTRL3 (09h) . . . 44
9.6 FIFO_CTRL4 (0Ah) . . . 45
9.7 COUNTER_BDR_REG1 (0Bh) . . . 46
9.8 COUNTER_BDR_REG2 (0Ch) . . . 46
9.9 INT1_CTRL (0Dh) . . . 47
9.10 INT2_CTRL (0Eh) . . . 48
9.11 WHO_AM_I (0Fh) . . . 48
9.12 CTRL1_XL (10h) . . . 49
9.13 CTRL2_G (11h) . . . 50
9.14 CTRL3_C (12h) . . . 51
9.15 CTRL4_C (13h) . . . 52
9.16 CTRL5_C (14h) . . . 53
9.17 CTRL6_C (15h) . . . 54
9.18 CTRL7_G (16h) . . . 55
9.19 CTRL8_XL (17h) . . . 56
9.20 CTRL9_XL (18h) . . . 59

9.21 CTRL10_C (19h) 60
9.22 ALL_INT_SRC (1Ah) 60
9.23 WAKE_UP_SRC (1Bh) 61
9.24 TAP_SRC (1Ch) 62
9.25 D6D_SRC (1Dh) 63
9.26 STATUS_REG (1Eh) / STATUS_SPIAux (1Eh) 64
9.27 OUT_TEMP_L (20h), OUT_TEMP_H (21h) 65
9.28 OUTX_L_G (22h) and OUTX_H_G (23h) 65
9.29 OUTY_L_G (24h) and OUTY_H_G (25h) 66
9.30 OUTZ_L_G (26h) and OUTZ_H_G (27h) 66
9.31 OUTX_L_A (28h) and OUTX_H_A (29h) 67
9.32 OUTY_L_A (2Ah) and OUTY_H_A (2Bh) 67
9.33 OUTZ_L_A (2Ch) and OUTZ_H_A (2Dh) 68
9.34 EMB_FUNC_STATUS_MAINPAGE (35h) 68
9.35 FSM_STATUS_A_MAINPAGE (36h) 69
9.36 FSM_STATUS_B_MAINPAGE (37h) 70
9.37 STATUS_MASTER_MAINPAGE (39h) 70
9.38 FIFO_STATUS1 (3Ah) 71
9.39 FIFO_STATUS2 (3Bh) 71
9.40 TIMESTAMP0 (40h), TIMESTAMP1 (41h), TIMESTAMP2 (42h), and TIMESTAMP3 (43h) 72
9.41 TAP_CFG0 (56h) 73
9.42 TAP_CFG1 (57h) 74
9.43 TAP_CFG2 (58h) 74
9.44 TAP_THS_6D (59h) 75
9.45 INT_DUR2 (5Ah) 76
9.46 WAKE_UP_THS (5Bh) 76
9.47 WAKE_UP_DUR (5Ch) 77
9.48 FREE_FALL (5Dh) 78
9.49 MD1_CFG (5Eh) 79
9.50 MD2_CFG (5Fh) 80
9.51 I3C_BUS_AVB (62h) 81
9.52 INTERNAL_FREQ_FINE (63h) 81
9.53 INT_OIS (6Fh) 82
9.54 CTRL1_OIS (70h) 83
9.55 CTRL2_OIS (71h) 84
9.56 CTRL3_OIS (72h) 85

9.57 X_OFS_USR (73h) 86
9.58 Y_OFS_USR (74h) 86
9.59 Z_OFS_USR (75h) 87
9.60 FIFO_DATA_OUT_TAG (78h) 87
9.61 FIFO_DATA_OUT_X_L (79h) and FIFO_DATA_OUT_X_H (7Ah) 88
9.62 FIFO_DATA_OUT_Y_L (7Bh) and FIFO_DATA_OUT_Y_H (7Ch) 88
9.63 FIFO_DATA_OUT_Z_L (7Dh) and FIFO_DATA_OUT_Z_H (7Eh) 89
10 Embedded functions register mapping 90
11 Embedded functions register description 92
11.1 PAGE_SEL (02h) 92
11.2 EMB_FUNC_EN_A (04h) 92
11.3 EMB_FUNC_EN_B (05h) 93
11.4 PAGE_ADDRESS (08h) 93
11.5 PAGE_VALUE (09h) 94
11.6 EMB_FUNC_INT1 (0Ah) 94
11.7 FSM_INT1_A (0Bh) 95
11.8 FSM_INT1_B (0Ch) 96
11.9 EMB_FUNC_INT2 (0Eh) 97
11.10 FSM_INT2_A (0Fh) 98
11.11 FSM_INT2_B (10h) 99
11.12 EMB_FUNC_STATUS (12h) 100
11.13 FSM_STATUS_A (13h) 101
11.14 FSM_STATUS_B (14h) 101
11.15 PAGE_RW (17h) 102
11.16 EMB_FUNC_FIFO_CFG (44h) 102
11.17 FSM_ENABLE_A (46h) 103
11.18 FSM_ENABLE_B (47h) 103
11.19 FSM_LONG_COUNTER_L (48h) and FSM_LONG_COUNTER_H (49h) 104
11.20 FSM_LONG_COUNTER_CLEAR (4Ah) 104
11.21 FSM_OUTS1 (4Ch) 105
11.22 FSM_OUTS2 (4Dh) 105
11.23 FSM_OUTS3 (4Eh) 106
11.24 FSM_OUTS4 (4Fh) 106
11.25 FSM_OUTS5 (50h) 107
11.26 FSM_OUTS6 (51h) 107
11.27 FSM_OUTS7 (52h) 108

11.28 FSM_OUTS8 (53h) . . . 108
11.29 FSM_OUTS9 (54h) . . . 109
11.30 FSM_OUTS10 (55h) . . . 109
11.31 FSM_OUTS11 (56h) . . . 110
11.32 FSM_OUTS12 (57h) . . . 110
11.33 FSM_OUTS13 (58h) . . . 111
11.34 FSM_OUTS14 (59h) . . . 111
11.35 FSM_OUTS15 (5Ah) . . . 112
11.36 FSM_OUTS16 (5Bh) . . . 112
11.37 EMB_FUNC_ODR_CFG_B (5Fh) . . . 113
11.38 STEP_COUNTER_L (62h) and STEP_COUNTER_H (63h) . . . 113
11.39 EMB_FUNC_SRC (64h) . . . 114
11.40 EMB_FUNC_INIT_A (66h) . . . 114
11.41 EMB_FUNC_INIT_B (67h) . . . 115
12 Embedded advanced features pages . . . 116
13 Embedded advanced features register description . . . 118
13.1 Page 0 - embedded advanced features registers . . . 118
13.1.1 MAG_SENSITIVITY_L (BAh) and MAG_SENSITIVITY_H (BBh) . . . 118
13.1.2 MAG_OFFX_L (C0h) and MAG_OFFX_H (C1h) . . . 119
13.1.3 MAG_OFFY_L (C2h) and MAG_OFFY_H (C3h) . . . 119
13.1.4 MAG_OFFZ_L (C4h) and MAG_OFFZ_H (C5h) . . . 120
13.1.5 MAG_SI_XX_L (C6h) and MAG_SI_XX_H (C7h) . . . 120
13.1.6 MAG_SI_XY_L (C8h) and MAG_SI_XY_H (C9h) . . . 121
13.1.7 MAG_SI_XZ_L (CAh) and MAG_SI_XZ_H (CBh) . . . 121
13.1.8 MAG_SI_YY_L (CCh) and MAG_SI_YY_H (CDh) . . . 122
13.1.9 MAG_SI_YZ_L (CEh) and MAG_SI_YZ_H (CFh) . . . 122
13.1.10 MAG_SI_ZZ_L (D0h) and MAG_SI_ZZ_H (D1h) . . . 123
13.1.11 MAG_CFG_A (D4h) . . . 124
13.1.12 MAG_CFG_B (D5h) . . . 124
13.2 Page 1 - embedded advanced features registers . . . 125
13.2.1 FSM_LC_TIMEOUT_L (7Ah) and FSM_LC_TIMEOUT_H (7Bh) . . . 125
13.2.2 FSM_PROGRAMS (7Ch) . . . 125
13.2.3 FSM_START_ADD_L (7Eh) and FSM_START_ADD_H (7Fh) . . . 126
13.2.4 PEDO_CMD_REG (83h) . . . 126
13.2.5 PEDO_DEB_STEPS_CONF (84h) . . . 127
13.2.6 PEDO_SC_DELTAT_L (D0h) & PEDO_SC_DELTAT_H (D1h) . . . 127
14 Sensor hub register mapping . . . 128

15 Sensor hub register description. 129
15.1 SENSOR_HUB_1 (02h) 129
15.2 SENSOR_HUB_2 (03h) 129
15.3 SENSOR_HUB_3 (04h) 129
15.4 SENSOR_HUB_4 (05h) 130
15.5 SENSOR_HUB_5 (06h) 130
15.6 SENSOR_HUB_6 (07h) 130
15.7 SENSOR_HUB_7 (08h) 131
15.8 SENSOR_HUB_8 (09h) 131
15.9 SENSOR_HUB_9 (0Ah) 131
15.10 SENSOR_HUB_10 (0Bh) 132
15.11 SENSOR_HUB_11 (0Ch) 132
15.12 SENSOR_HUB_12 (0Dh) 132
15.13 SENSOR_HUB_13 (0Eh) 133
15.14 SENSOR_HUB_14 (0Fh) 133
15.15 SENSOR_HUB_15 (10h) 133
15.16 SENSOR_HUB_16 (11h) 134
15.17 SENSOR_HUB_17 (12h) 134
15.18 SENSOR_HUB_18 (13h) 134
15.19 MASTER_CONFIG (14h) 135
15.20 SLV0_ADD (15h) 136
15.21 SLV0_SUBADD (16h) 136
15.22 SLV0_CONFIG (17h) 136
15.23 SLV1_ADD (18h) 137
15.24 SLV1_SUBADD (19h) 137
15.25 SLV1_CONFIG (1Ah) 137
15.26 SLV2_ADD (1Bh) 138
15.27 SLV2_SUBADD (1Ch) 138
15.28 SLV2_CONFIG (1Dh) 138
15.29 SLV3_ADD (1Eh) 139
15.30 SLV3_SUBADD (1Fh) 139
15.31 SLV3_CONFIG (20h) 139
15.32 DATAWRITE_SLV0 (21h) 140
15.33 STATUS_MASTER (22h) 140
16 Soldering information. 141
17 Package information 142

17.1 LGA-14L package information 142
17.2 LGA-14 packing information 143
Revision history 145

List of tables

Table 1. Pin description . . . 8
Table 2. Mechanical characteristics . . . 9
Table 3. Electrical characteristics . . . 11
Table 4. Temperature sensor characteristics . . . 11
Table 5. SPI slave timing values (in mode 3) . . . 12
Table 6. I²C slave timing values . . . 13
Table 7. Absolute maximum ratings . . . 14
Table 8. Serial interface pin description . . . 16
Table 9. I²C terminology . . . 16
Table 10. SAD+read/write patterns . . . 17
Table 11. Transfer when master is writing one byte to slave . . . 17
Table 12. Transfer when master is writing multiple bytes to slave . . . 17
Table 13. Transfer when master is receiving (reading) one byte of data from slave . . . 17
Table 14. Transfer when master is receiving (reading) multiple bytes of data from slave . . . 17
Table 15. MIPI I3C^{SM} CCC commands . . . 23
Table 16. Master I²C pin details . . . 25
Table 17. Auxiliary SPI pin details . . . 25
Table 18. Gyroscope LPF2 bandwidth selection . . . 29
Table 19. Internal pin status . . . 37
Table 20. Registers address map . . . 39
Table 21. FUNC_CFG_ACCESS register . . . 42
Table 22. FUNC_CFG_ACCESS register description . . . 42
Table 23. PIN_CTRL register . . . 42
Table 24. PIN_CTRL register description . . . 42
Table 25. FIFO_CTRL1 register . . . 43
Table 26. FIFO_CTRL1 register description . . . 43
Table 27. FIFO_CTRL2 register . . . 43
Table 28. FIFO_CTRL2 register description . . . 43
Table 29. FIFO_CTRL3 register . . . 44
Table 30. FIFO_CTRL3 register description . . . 44
Table 31. FIFO_CTRL4 register . . . 45
Table 32. FIFO_CTRL4 register description . . . 45
Table 33. COUNTER_BDR_REG1 register . . . 46
Table 34. COUNTER_BDR_REG1 register description . . . 46
Table 35. COUNTER_BDR_REG2 register . . . 46
Table 36. COUNTER_BDR_REG2 register description . . . 46
Table 37. INT1_CTRL register . . . 47
Table 38. INT1_CTRL register description . . . 47
Table 39. INT2_CTRL register . . . 48
Table 40. INT2_CTRL register description . . . 48
Table 41. WhoAmI register . . . 48
Table 42. CTRL1_XL register . . . 49
Table 43. CTRL1_XL register description . . . 49
Table 44. Accelerometer ODR register setting . . . 49
Table 45. Accelerometer full-scale selection . . . 49
Table 46. CTRL2_G register . . . 50
Table 47. CTRL2_G register description . . . 50
Table 48. Gyroscope ODR configuration setting . . . 50
Table 49. CTRL3_C register . . . 51
Table 50. CTRL3_C register description . . . 51
Table 51. CTRL4_C register . . . 52
Table 52. CTRL4_C register description . . . 52
Table 53. CTRL5_C register . . . 53

Table 54. CTRL5_C register description . . . 53
Table 55. Angular rate sensor self-test mode selection . . . 53
Table 56. Linear acceleration sensor self-test mode selection . . . 53
Table 57. CTRL6_C register . . . 54
Table 58. CTRL6_C register description . . . 54
Table 59. Trigger mode selection . . . 54
Table 60. Gyroscope LPF1 bandwidth selection . . . 54
Table 61. CTRL7_G register . . . 55
Table 62. CTRL7_G register description . . . 55
Table 63. CTRL8_XL register . . . 56
Table 64. CTRL8_XL register description . . . 56
Table 65. Accelerometer bandwidth configurations . . . 57
Table 66. CTRL9_XL register . . . 59
Table 67. CTRL9_XL register description . . . 59
Table 68. CTRL10_C register . . . 60
Table 69. CTRL10_C register description . . . 60
Table 70. ALL_INT_SRC register . . . 60
Table 71. ALL_INT_SRC register description . . . 60
Table 72. WAKE_UP_SRC register . . . 61
Table 73. WAKE_UP_SRC register description . . . 61
Table 74. TAP_SRC register . . . 62
Table 75. TAP_SRC register description . . . 62
Table 76. D6D_SRC register . . . 63
Table 77. D6D_SRC register description . . . 63
Table 78. STATUS_REG register . . . 64
Table 79. STATUS_REG register description . . . 64
Table 80. STATUS_SPIAux register . . . 64
Table 81. STATUS_SPIAux description . . . 64
Table 82. OUT_TEMP_L register . . . 65
Table 83. OUT_TEMP_H register . . . 65
Table 84. OUT_TEMP register description . . . 65
Table 85. OUTX_L_G register . . . 65
Table 86. OUTX_H_G register . . . 65
Table 87. OUTX_H_G register description . . . 65
Table 88. OUTY_L_G register . . . 66
Table 89. OUTY_H_G register . . . 66
Table 90. OUTY_H_G register description . . . 66
Table 91. OUTZ_L_G register . . . 66
Table 92. OUTZ_H_G register . . . 66
Table 93. OUTZ_H_G register description . . . 66
Table 94. OUTX_L_A register . . . 67
Table 95. OUTX_H_A register . . . 67
Table 96. OUTX_H_A register description . . . 67
Table 97. OUTY_L_A register . . . 67
Table 98. OUTY_H_A register . . . 67
Table 99. OUTY_H_A register description . . . 67
Table 100. OUTZ_L_A register . . . 68
Table 101. OUTZ_H_A register . . . 68
Table 102. OUTZ_H_A register description . . . 68
Table 103. EMB_FUNC_STATUS_MAINPAGE register . . . 68
Table 104. EMB_FUNC_STATUS_MAINPAGE register description . . . 68
Table 105. FSM_STATUS_A_MAINPAGE register . . . 69
Table 106. FSM_STATUS_A_MAINPAGE register description . . . 69
Table 107. FSM_STATUS_B_MAINPAGE register . . . 70
Table 108. FSM_STATUS_B_MAINPAGE register description . . . 70

Table 109. STATUS_MASTER_MAINPAGE register . . . 70
Table 110. STATUS_MASTER_MAINPAGE register description . . . 70
Table 111. FIFO_STATUS1 register . . . 71
Table 112. FIFO_STATUS1 register description . . . 71
Table 113. FIFO_STATUS2 register . . . 71
Table 114. FIFO_STATUS2 register description . . . 71
Table 115. TIMESTAMP output registers . . . 72
Table 116. TIMESTAMP output register description . . . 72
Table 117. TAP_CFG0 register . . . 73
Table 118. TAP_CFG0 register description . . . 73
Table 119. TAP_CFG1 register . . . 74
Table 120. TAP_CFG1 register description . . . 74
Table 121. TAP priority decoding . . . 74
Table 122. TAP_CFG2 register . . . 74
Table 123. TAP_CFG2 register description . . . 74
Table 124. TAP_THS_6D register . . . 75
Table 125. TAP_THS_6D register description . . . 75
Table 126. Threshold for D4D/D6D function . . . 75
Table 127. INT_DUR2 register . . . 76
Table 128. INT_DUR2 register description . . . 76
Table 129. WAKE_UP_THS register . . . 76
Table 130. WAKE_UP_THS register description . . . 76
Table 131. WAKE_UP_DUR register . . . 77
Table 132. WAKE_UP_DUR register description . . . 77
Table 133. FREE_FALL register . . . 78
Table 134. FREE_FALL register description . . . 78
Table 135. Threshold for free-fall function . . . 78
Table 136. MD1_CFG register . . . 79
Table 137. MD1_CFG register description . . . 79
Table 138. MD2_CFG register . . . 80
Table 139. MD2_CFG register description . . . 80
Table 140. I3C_BUS_AVB register . . . 81
Table 141. I3C_BUS_AVB register description . . . 81
Table 142. INTERNAL_FREQ_FINE register . . . 81
Table 143. INTERNAL_FREQ_FINE register description . . . 81
Table 144. INT_OIS register . . . 82
Table 145. INT_OIS register description . . . 82
Table 146. CTRL1_OIS register . . . 83
Table 147. CTRL1_OIS register description . . . 83
Table 148. DEN mode selection . . . 83
Table 149. CTRL2_OIS register . . . 84
Table 150. CTRL2_OIS register description . . . 84
Table 151. Gyroscope OIS chain digital LPF1 filter bandwidth selection . . . 84
Table 152. CTRL3_OIS register . . . 85
Table 153. CTRL3_OIS register description . . . 85
Table 154. Accelerometer OIS channel full-scale selection . . . 85
Table 155. Accelerometer OIS channel bandwidth and phase . . . 85
Table 156. Self-test nominal output variation . . . 86
Table 157. X_OFS_USR register . . . 86
Table 158. X_OFS_USR register description . . . 86
Table 159. Y_OFS_USR register . . . 86
Table 160. Y_OFS_USR register description . . . 86
Table 161. Z_OFS_USR register . . . 87
Table 162. Z_OFS_USR register description . . . 87
Table 163. FIFO_DATA_OUT_TAG register . . . 87

Table 164. FIFO_DATA_OUT_TAG register description . . . 87
Table 165. FIFO tag . . . 87
Table 166. FIFO_DATA_OUT_X_H and FIFO_DATA_OUT_X_L registers . . . 88
Table 167. FIFO_DATA_OUT_X_H and FIFO_DATA_OUT_X_L register description . . . 88
Table 168. FIFO_DATA_OUT_Y_H and FIFO_DATA_OUT_Y_L registers . . . 88
Table 169. FIFO_DATA_OUT_Y_H and FIFO_DATA_OUT_Y_L register description . . . 88
Table 170. FIFO_DATA_OUT_Z_H and FIFO_DATA_OUT_Z_L registers . . . 89
Table 171. FIFO_DATA_OUT_Z_H and FIFO_DATA_OUT_Z_L register description . . . 89
Table 172. Register address map - embedded functions . . . 90
Table 173. PAGE_SEL register . . . 92
Table 174. PAGE_SEL register description . . . 92
Table 175. EMB_FUNC_EN_A register . . . 92
Table 176. EMB_FUNC_EN_A register description . . . 92
Table 177. EMB_FUNC_EN_B register . . . 93
Table 178. EMB_FUNC_EN_B register description . . . 93
Table 179. PAGE_ADDRESS register . . . 93
Table 180. PAGE_ADDRESS register description . . . 93
Table 181. PAGE_VALUE register . . . 94
Table 182. PAGE_VALUE register description . . . 94
Table 183. EMB_FUNC_INT1 register . . . 94
Table 184. EMB_FUNC_INT1 register description . . . 94
Table 185. FSM_INT1_A register . . . 95
Table 186. FSM_INT1_A register description . . . 95
Table 187. FSM_INT1_B register . . . 96
Table 188. FSM_INT1_B register description . . . 96
Table 189. EMB_FUNC_INT2 register . . . 97
Table 190. EMB_FUNC_INT2 register description . . . 97
Table 191. FSM_INT2_A register . . . 98
Table 192. FSM_INT2_A register description . . . 98
Table 193. FSM_INT2_B register . . . 99
Table 194. FSM_INT2_B register description . . . 99
Table 195. EMB_FUNC_STATUS register . . . 100
Table 196. EMB_FUNC_STATUS register description . . . 100
Table 197. FSM_STATUS_A register . . . 101
Table 198. FSM_STATUS_A register description . . . 101
Table 199. FSM_STATUS_B register . . . 101
Table 200. FSM_STATUS_B register description . . . 101
Table 201. PAGE_RW register . . . 102
Table 202. PAGE_RW register description . . . 102
Table 203. EMB_FUNC_FIFO_CFG register . . . 102
Table 204. EMB_FUNC_FIFO_CFG register description . . . 102
Table 205. FSM_ENABLE_A register . . . 103
Table 206. FSM_ENABLE_A register description . . . 103
Table 207. FSM_ENABLE_B register . . . 103
Table 208. FSM_ENABLE_B register description . . . 103
Table 209. FSM_LONG_COUNTER_L register . . . 104
Table 210. FSM_LONG_COUNTER_L register description . . . 104
Table 211. FSM_LONG_COUNTER_H register . . . 104
Table 212. FSM_LONG_COUNTER_H register description . . . 104
Table 213. FSM_LONG_COUNTER_CLEAR register . . . 104
Table 214. FSM_LONG_COUNTER_CLEAR register description . . . 104
Table 215. FSM_OUTS1 register . . . 105
Table 216. FSM_OUTS1 register description . . . 105
Table 217. FSM_OUTS2 register . . . 105
Table 218. FSM_OUTS2 register description . . . 105

Table 219. FSM_OUTS3 register . . . 106
Table 220. FSM_OUTS3 register description . . . 106
Table 221. FSM_OUTS4 register . . . 106
Table 222. FSM_OUTS4 register description . . . 106
Table 223. FSM_OUTS5 register . . . 107
Table 224. FSM_OUTS5 register description . . . 107
Table 225. FSM_OUTS6 register . . . 107
Table 226. FSM_OUTS6 register description . . . 107
Table 227. FSM_OUTS7 register . . . 108
Table 228. FSM_OUTS7 register description . . . 108
Table 229. FSM_OUTS8 register . . . 108
Table 230. FSM_OUTS8 register description . . . 108
Table 231. FSM_OUTS9 register . . . 109
Table 232. FSM_OUTS9 register description . . . 109
Table 233. FSM_OUTS10 register . . . 109
Table 234. FSM_OUTS10 register description . . . 109
Table 235. FSM_OUTS11 register . . . 110
Table 236. FSM_OUTS11 register description . . . 110
Table 237. FSM_OUTS12 register . . . 110
Table 238. FSM_OUTS12 register description . . . 110
Table 239. FSM_OUTS13 register . . . 111
Table 240. FSM_OUTS13 register description . . . 111
Table 241. FSM_OUTS14 register . . . 111
Table 242. FSM_OUTS14 register description . . . 111
Table 243. FSM_OUTS15 register . . . 112
Table 244. FSM_OUTS15 register description . . . 112
Table 245. FSM_OUTS16 register . . . 112
Table 246. FSM_OUTS16 register description . . . 112
Table 247. EMB_FUNC_ODR_CFG_B register . . . 113
Table 248. EMB_FUNC_ODR_CFG_B register description . . . 113
Table 249. STEP_COUNTER_L register . . . 113
Table 250. STEP_COUNTER_L register description . . . 113
Table 251. STEP_COUNTER_H register . . . 113
Table 252. STEP_COUNTER_H register description . . . 113
Table 253. EMB_FUNC_SRC register . . . 114
Table 254. EMB_FUNC_SRC register description . . . 114
Table 255. EMB_FUNC_INIT_A register . . . 114
Table 256. EMB_FUNC_INIT_A register description . . . 114
Table 257. EMB_FUNC_INIT_B register . . . 115
Table 258. EMB_FUNC_INIT_B register description . . . 115
Table 259. Register address map - embedded advanced features page 0 . . . 116
Table 260. Register address map - embedded advanced features page 1 . . . 116
Table 261. MAG_SENSITIVITY_L register . . . 118
Table 262. MAG_SENSITIVITY_L register description . . . 118
Table 263. MAG_SENSITIVITY_H register . . . 118
Table 264. MAG_SENSITIVITY_H register description . . . 118
Table 265. MAG_OFFX_L register . . . 119
Table 266. MAG_OFFX_L register description . . . 119
Table 267. MAG_OFFX_H register . . . 119
Table 268. MAG_OFFX_H register description . . . 119
Table 269. MAG_OFFY_L register . . . 119
Table 270. MAG_OFFY_L register description . . . 119
Table 271. MAG_OFFY_H register . . . 119
Table 272. MAG_OFFY_H register description . . . 119
Table 273. MAG_OFFZ_L register . . . 120

Table 274. MAG_OFFZ_L register description . . . 120
Table 275. MAG_OFFZ_H register. . . . 120
Table 276. MAG_OFFZ_H register description . . . 120
Table 277. MAG_SI_XX_L register. . . . 120
Table 278. MAG_SI_XX_L register description . . . 120
Table 279. MAG_SI_XX_H register . . . 120
Table 280. MAG_SI_XX_H register description . . . 120
Table 281. MAG_SI_XY_L register. . . . 121
Table 282. MAG_SI_XY_L register description . . . 121
Table 283. MAG_SI_XY_H register . . . 121
Table 284. MAG_SI_XY_H register description . . . 121
Table 285. MAG_SI_XZ_L register. . . . 121
Table 286. MAG_SI_XZ_L register description . . . 121
Table 287. MAG_SI_XZ_H register . . . 121
Table 288. MAG_SI_XZ_H register description . . . 121
Table 289. MAG_SI_YY_L register. . . . 122
Table 290. MAG_SI_YY_L register description . . . 122
Table 291. MAG_SI_YY_H register . . . 122
Table 292. MAG_SI_YY_H register description . . . 122
Table 293. MAG_SI_YZ_L register. . . . 122
Table 294. MAG_SI_YZ_L register description . . . 122
Table 295. MAG_SI_YZ_H register . . . 122
Table 296. MAG_SI_YZ_H register description . . . 122
Table 297. MAG_SI_ZZ_L register. . . . 123
Table 298. MAG_SI_ZZ_L register description. . . . 123
Table 299. MAG_SI_ZZ_H register . . . 123
Table 300. MAG_SI_ZZ_H register description . . . 123
Table 301. MAG_CFG_A register . . . 124
Table 302. MAG_CFG_A description . . . 124
Table 303. MAG_CFG_B register . . . 124
Table 304. MAG_CFG_B description . . . 124
Table 305. FSM_LC_TIMEOUT_L register . . . 125
Table 306. FSM_LC_TIMEOUT_L register description . . . 125
Table 307. FSM_LC_TIMEOUT_H register . . . 125
Table 308. FSM_LC_TIMEOUT_H register description . . . 125
Table 309. FSM_PROGRAMS register . . . 125
Table 310. FSM_PROGRAMS register description. . . . 125
Table 311. FSM_START_ADD_L register . . . 126
Table 312. FSM_START_ADD_L register description . . . 126
Table 313. FSM_START_ADD_H register. . . . 126
Table 314. FSM_START_ADD_H register description. . . . 126
Table 315. PEDO_CMD_REG register . . . 126
Table 316. PEDO_CMD_REG register description . . . 126
Table 317. PEDO_DEB_STEPS_CONF register . . . 127
Table 318. PEDO_DEB_STEPS_CONF register description . . . 127
Table 319. PEDO_SC_DELTAT_L register . . . 127
Table 320. PEDO_SC_DELTAT_H register . . . 127
Table 321. PEDO_SC_DELTAT_H/L register description. . . . 127
Table 322. Register address map - sensor hub registers. . . . 128
Table 323. SENSOR_HUB_1 register. . . . 129
Table 324. SENSOR_HUB_1 register description . . . 129
Table 325. SENSOR_HUB_2 register. . . . 129
Table 326. SENSOR_HUB_2 register description . . . 129
Table 327. SENSOR_HUB_3 register. . . . 129
Table 328. SENSOR_HUB_3 register description . . . 129

Table 329. SENSOR_HUB_4 register . . . 130
Table 330. SENSOR_HUB_4 register description . . . 130
Table 331. SENSOR_HUB_5 register . . . 130
Table 332. SENSOR_HUB_5 register description . . . 130
Table 333. SENSOR_HUB_6 register . . . 130
Table 334. SENSOR_HUB_6 register description . . . 130
Table 335. SENSOR_HUB_7 register . . . 131
Table 336. SENSOR_HUB_7 register description . . . 131
Table 337. SENSOR_HUB_8 register . . . 131
Table 338. SENSOR_HUB_8 register description . . . 131
Table 339. SENSOR_HUB_9 register . . . 131
Table 340. SENSOR_HUB_9 register description . . . 131
Table 341. SENSOR_HUB_10 register . . . 132
Table 342. SENSOR_HUB_10 register description . . . 132
Table 343. SENSOR_HUB_11 register . . . 132
Table 344. SENSOR_HUB_11 register description . . . 132
Table 345. SENSOR_HUB_12 register . . . 132
Table 346. SENSOR_HUB_12 register description . . . 132
Table 347. SENSOR_HUB_13 register . . . 133
Table 348. SENSOR_HUB_13 register description . . . 133
Table 349. SENSOR_HUB_14 register . . . 133
Table 350. SENSOR_HUB_14 register description . . . 133
Table 351. SENSOR_HUB_15 register . . . 133
Table 352. SENSOR_HUB_15 register description . . . 133
Table 353. SENSOR_HUB_16 register . . . 134
Table 354. SENSOR_HUB_16 register description . . . 134
Table 355. SENSOR_HUB_17 register . . . 134
Table 356. SENSOR_HUB_17 register description . . . 134
Table 357. SENSOR_HUB_17 register . . . 134
Table 358. SENSOR_HUB_17 register description . . . 134
Table 359. MASTER_CONFIG register . . . 135
Table 360. MASTER_CONFIG register description . . . 135
Table 361. SLV0_ADD register . . . 136
Table 362. SLV_ADD register description . . . 136
Table 363. SLV0_SUBADD register . . . 136
Table 364. SLV0_SUBADD register description . . . 136
Table 365. SLV0_CONFIG register . . . 136
Table 366. SLV0_CONFIG register description . . . 136
Table 367. SLV1_ADD register . . . 137
Table 368. SLV1_ADD register description . . . 137
Table 369. SLV1_SUBADD register . . . 137
Table 370. SLV1_SUBADD register description . . . 137
Table 371. SLV1_CONFIG register . . . 137
Table 372. SLV1_CONFIG register description . . . 137
Table 373. SLV2_ADD register . . . 138
Table 374. SLV2_ADD register description . . . 138
Table 375. SLV2_SUBADD register . . . 138
Table 376. SLV2_SUBADD register description . . . 138
Table 377. SLV2_CONFIG register . . . 138
Table 378. SLV2_CONFIG register description . . . 138
Table 379. SLV3_ADD register . . . 139
Table 380. SLV3_ADD register description . . . 139
Table 381. SLV3_SUBADD register . . . 139
Table 382. SLV3_SUBADD register description . . . 139
Table 383. SLV3_CONFIG register . . . 139

Table 384. SLV3_CONFIG register description . . . 139
Table 385. DATAWRITE_SLV0 register. . . . 140
Table 386. DATAWRITE_SLV0 register description . . . 140
Table 387. STATUS_MASTER register. . . . 140
Table 388. STATUS_MASTER register description. . . . 140
Table 389. Reel dimensions for carrier tape of LGA-14 package . . . 144
Table 390. Document revision history. . . . 145

List of figures

Figure 1. Generic state machine . . . 5
Figure 2. State machine in the LSM6DSO . . . 5
Figure 3. Pin connections . . . 6
Figure 4. LSM6DSO connection modes . . . 7
Figure 5. SPI slave timing diagram (in mode 3) . . . 12
Figure 6. I²C slave timing diagram . . . 13
Figure 7. Read and write protocol (in mode 3) . . . 18
Figure 8. SPI read protocol (in mode 3) . . . 19
Figure 9. Multiple byte SPI read protocol (2-byte example) (in mode 3) . . . 19
Figure 10. SPI write protocol (in mode 3) . . . 20
Figure 11. Multiple byte SPI write protocol (2-byte example) (in mode 3) . . . 20
Figure 12. SPI read protocol in 3-wire mode (in mode 3) . . . 21
Figure 13. I²C and I3C both active (INT1 pin not connected) . . . 24
Figure 14. Only I3C active (INT1 pin connected to VDDIO) . . . 24
Figure 15. Block diagram of filters . . . 27
Figure 16. Accelerometer UI chain . . . 27
Figure 17. Accelerometer composite filter . . . 28
Figure 18. Accelerometer chain with mode 4 enabled . . . 28
Figure 19. Gyroscope digital chain - mode 1 (UI/EIS) and mode 2 . . . 29
Figure 20. Gyroscope digital chain - mode 3 / mode 4 (OIS/EIS) . . . 30
Figure 21. LSM6DSO electrical connections in mode 1 . . . 34
Figure 22. LSM6DSO electrical connections in mode 2 . . . 35
Figure 23. LSM6DSO electrical connections in mode 3 and mode 4 (auxiliary 3/4-wire SPI) . . . 36
Figure 24. Accelerometer block diagram . . . 58
Figure 25. LGA-14L 2.5 x 3.0 x 0.86 mm package outline and mechanical data . . . 142
Figure 26. Carrier tape information for LGA-14 package . . . 143
Figure 27. LGA-14 package orientation in carrier tape . . . 143
Figure 28. Reel information for carrier tape of LGA-14 package . . . 144

IMPORTANT NOTICE – READ CAREFULLY

STMicroelectronics NV and its subsidiaries (“ST”) reserve the right to make changes, corrections, enhancements, modifications, and improvements to ST products and/or to this document at any time without notice. Purchasers should obtain the latest relevant information on ST products before placing orders. ST products are sold pursuant to ST’s terms and conditions of sale in place at the time of order acknowledgment.

Purchasers are solely responsible for the choice, selection, and use of ST products and ST assumes no liability for application assistance or the design of purchasers’ products.

No license, express or implied, to any intellectual property right is granted by ST herein.

Resale of ST products with provisions different from the information set forth herein shall void any warranty granted by ST for such product.

ST and the ST logo are trademarks of ST. For additional information about ST trademarks, refer to www.st.com/trademarks. All other product or service names are the property of their respective owners.

Information in this document supersedes and replaces information previously supplied in any prior versions of this document.

© 2024 STMicroelectronics – All rights reserved