CURRENT SENSE TERMINALS:

8.5V MAX
1.0A MAX (FOR 0.05 OHM SENSE RESISTOR)

POL SIGNAL: H⟷L

1 $\overline{INT}$ = 0.0001707 Ah
5859 $\overline{INTS}$ = 1 Ah

AT 1A (MAX), $\overline{INT}$ WILL PULSE AT
1.6275 Hz = 0.6144 S

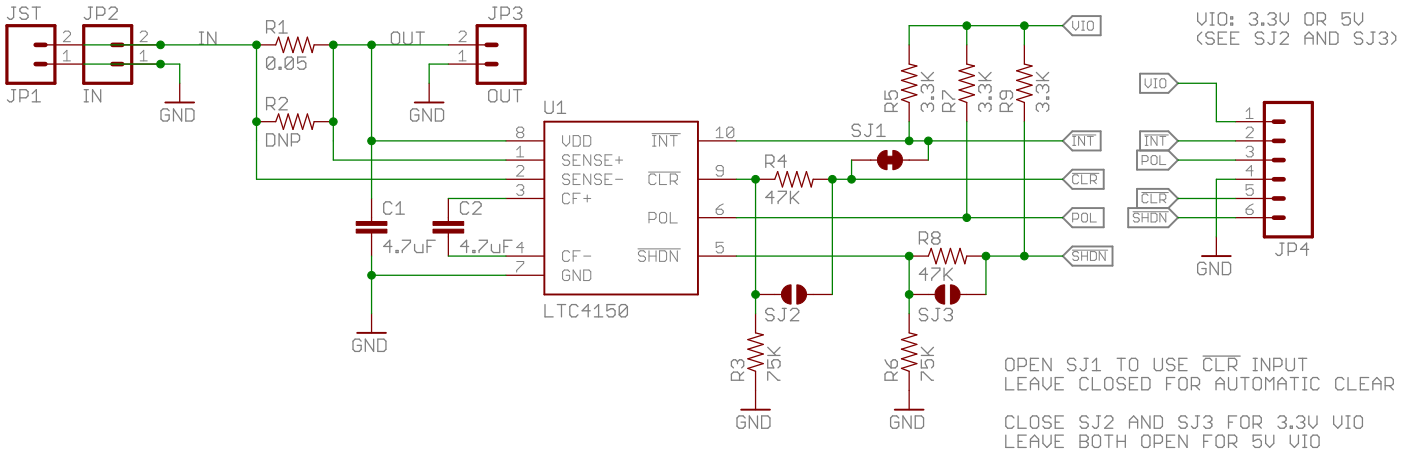

VIO: 3.3V OR 5V
(SEE SJ2 AND SJ3)

OPEN SJ1 TO USE $\overline{CLR}$ INPUT
LEAVE CLOSED FOR AUTOMATIC CLEAR

CLOSE SJ2 AND SJ3 FOR 3.3V VIO
LEAVE BOTH OPEN FOR 5V VIO

Released under the Creative Commons
Attribution Share-Alike 4.0 License
https://creativecommons.org/licenses/by-sa/4.0/

open hardware

TITLE: LTC4150_BOB_v10

SFE	Design by: M Grusin	REV: 10
SFE	Date: 9/10/2014 6:28:58 PM	Sheet: 1/1