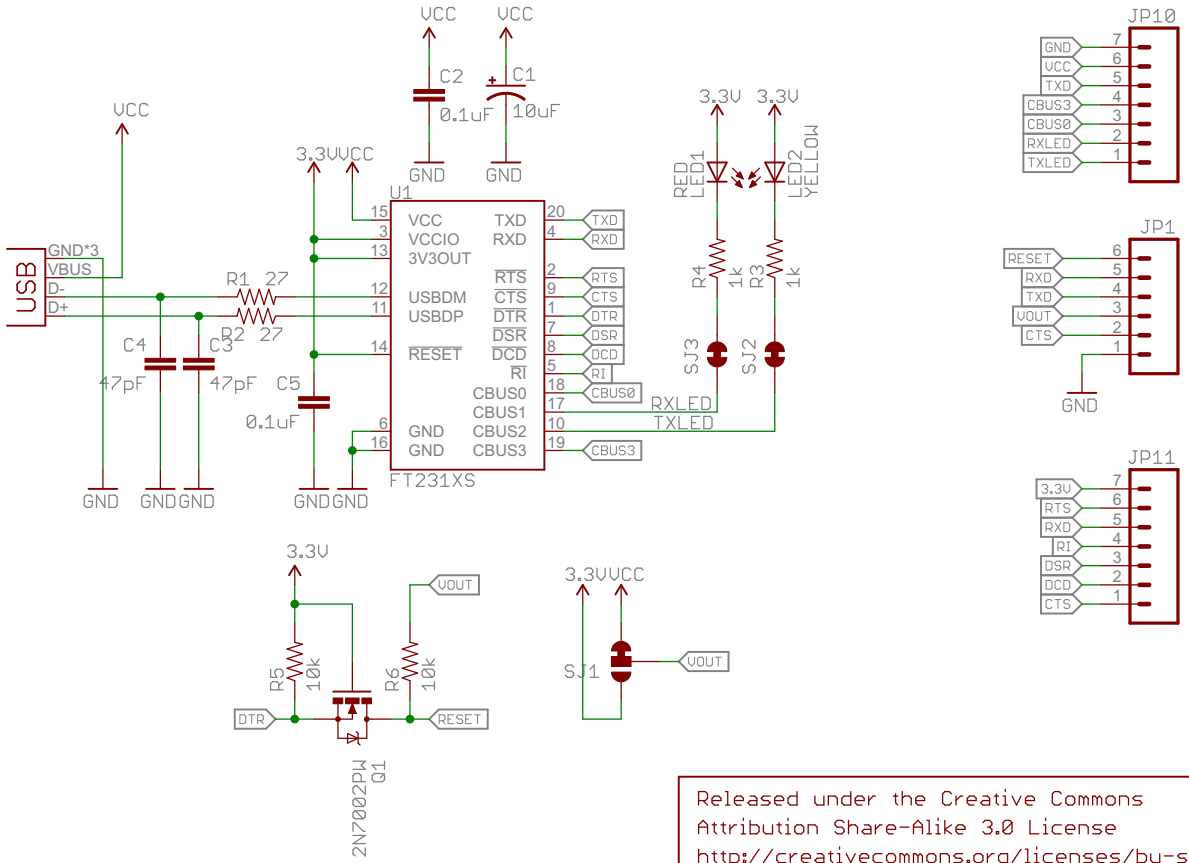

Released under the Creative Commons
Attribution Share-Alike 3.0 License
http://creativecommons.org/licenses/by-sa/3.0

TITLE: ft231x-breakout-v01 | SFE

Design by: | REV:

Date: 2/18/2013 12:03:02 PM | Sheet: 1/1

open hardware